PVM-1440QM/1442QM/1444QM

SERVICE MANUAL

AEP Model

PVM-1440QM
Chassis No. SCC-C57A-A
PVM-1442QM
Chassis No. SCC-C56A-A
PVM-1444QM
Chassis No. SCC-C55A-A

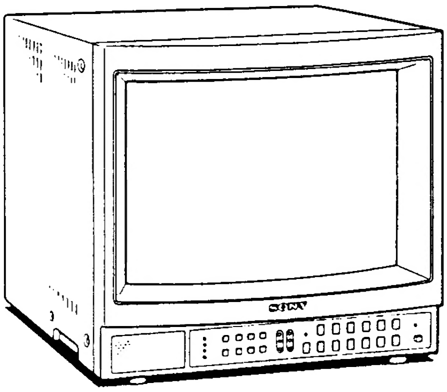

(PVM-1440QM/1442QM)

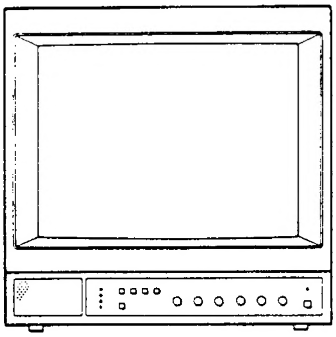

(PVM-1444QM)

SPECIFICATIONS

Video signal

Frequency response	
	Line input: More than 7 MHz (−3 dB)
	Y/C input: More than 8 MHz (−3 dB)
	Component input (Y/R-Y/B-Y): More than 8 MHz (−3 dB)
	R.G.B. input (analog): More than 9 MHz (−3 dB)
Chrominance subcarrier attenuation	
	3.58 MHz: Less than −30 dB (comb filter)
	4.43 MHz: Less than −36 dB (trap filter)
Band pass	3.58 MHz: 2 MHz equiband
	4.43 MHz: 2 MHz equiband
Chrominance/luminance time error	
	Composite: Less than ±100 ns
	Y/C Video: Less than ±50 ns
	Component: Less than ±50 ns
Aperture correction	
	−4.5 to +6.5 dB (at 4.5 MHz)
Synchronization	AFC time constant: 1 msec
Line pull range	Horizontal: ±500 Hz
	Vertical: 8 Hz

Picture performance

Normal scan	7% overscan of CRT effective screen area
Under scan	3% underscan of CRT effective screen area
H. linearity error	Less than 4%
V. linearity error	Less than 5%
Convergence	Central area: 0.6 mm
	Peripheral area: 0.8 mm
Raster size stability	
	H: 1.0%, V: 1.5%
High voltage regulation	
	3%
Audio output	0.6 W (Max.)
CRT	PVM-1444QM/PVM-1442QM: EBU
	PVM-1440QM: P-22

Chromacity coordinates (EBU only)

	X	Y
Red	0.640	0.330
Green	0.290	0.600
Blue	0.150	0.060

(tolerance ±0.01)

Color temperature	
	6,500°K/9,300°K (+8MPCD), selectable
AC regulation range	
	220 - 240 V AC, 50/60 Hz
Power consumption	
	Approx. 75 Wh

Inputs

For all models

VIDEO IN: BNC connector
AUDIO IN: phono jack
VTR: 8-pin connector
Y/C-INPUT
  VIDEO: 4-pin connector
  AUDIO: phono jack

PVM-1444QM only

EXT SYNC: BNC connector
  composite sync 1-4 Vp-p, negative, 75 ohms terminated, automatically released when cable is connected to the output connector.
ANALOG RGB/COMPONENT: BNC connector
  R, G, B and Y channels: 0.7 Vp-p, ±6 dB, non composite
  R-Y and B-Y channels: 0.525 Vp-p, ±6 dB
  (Standard color bar signal of 75-percent chrominance)
  When the composite signal is fed to the G or Y channels, the monitor can be activated in the internal sync mode.
  75 ohms terminated, automatically released when a cable is connected to the output connector.
CTRL S: Minijack

PVM-1442QM only

EXT SYNC: BNC connector
  composite sync 1-4 Vp-p, negative, 75 ohms terminated, automatically released when cable is connected to the output connector.
ANALOG RGB: BNC connector
  0.7 Vp-p, ±6 dB, non composite
  75 ohms terminated, automatically released when cable is connected to the output connector.
DIGITAL RGB: 9-pin connector
CTRL S: Minijack

PVM-1440QM

ANALOG RGB signal through AV: 0.7 Vp-p, ±6 dB, non composite, 75 ohms terminated

For Service Manuals
MAURITRON SERVICES
8 Cherry Tree Road, Chinnor
Oxfordshire, OX9 4QY.
Tel (01844) 351694
Fax (01844) 352554
email:- mauritron@dial.pipex.com

— Continued on next page —

TRINITRON® COLOR VIDEO MONITOR

SONY®

MICROFILM

Outputs

For all models

VIDEO OUT: BNC connector
Loop-through
AUDIO OUT: Phono jack
Loop-through

PVM-1444QM only

EXT SYNC: BNC connector
Loop-through
ANALOG RGB/COMPONENT: BNC connector
Loop-through
CTRL S: Minijack
Loop-through

PVM-1442QM only

EXT SYNC: BNC connector
Loop-through
ANALOG RGB: BNC connector
Loop-through
CTRL S: Minijack
Loop-through

General

Dimensions	Approx. 346 × 340 × 412 mm (w/h/d) ($13\frac{5}{8} \times 13\frac{1}{2} \times 16\frac{1}{4}$ inches)
Weight	Approx. 16.5 kg (36 lb 6 oz)

Pin assignment

DIGITAL RGB connector (9-pin)

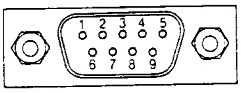

Pin No.	Signal	Signal level
1	GND (ground)	GND
2	GND for the signal	GND
3	Red input	Positive polarity (TTL level)
4	Green input	↑
5	Blue input	↑
6	Intensity	↑
7	NC (no connection)	—
8	H-SYNC	Positive or negative polarity (TTL level)
9	V-SYNC	Same polarity as H-SYNC (TTL level)

Note

If the intensity function of Pin No. 6 is not used, set the internal switch on the Qd board to the B position, and connect the Pin No. 6 to the GND. With this setting, when the positive intensity signal synchronized to the characters on the screen is fed, the luminance of the characters will be increased.

If the specific intensity function, such as that of an IBM microcomputer, is used, set the internal switch on the Qd board to the A position, and feed the intensity control signal to Pin No. 6.

VTR connector (8-pin)

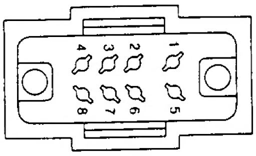

Pin No.	Signal	Description
1	Audio input	−5 dBs, high input impedance (more than 47 kilohms)
2	Video input	Composite 1 Vp-p, sync negative, 75 ohms
3	GND	GND
4	NC	—
5	GND	GND
6	GND	GND
7	GND	GND
8	GND	GND

Y/C (Y/C separate) INPUT connector (4-pin)

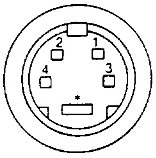

Pin No.	Signal	Description
1	Y-input	1 Vp-p, sync negative, 75 ohms
2	CHROMA sub-carrier-input	300 mVp-p, burst Delay time between Y and C: within 0±100 nsec., 75 ohms
3	GND for Y-input	GND
4	GND for CHROMA-input	GND
*	(Slot for internal switch)	Press the switch inside this slot. The signal from Y/C-INPUT connector has priority over the one from VTR (8-pin) connector.

AV (EURO-TV) connector (21-pin)

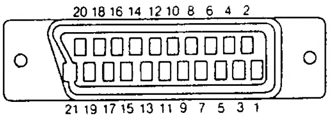

Pin No.	Signal	Description
1	Audio output B (right)	Standard level: 0.5 Vrms Output impedance: Less than 1 k ohm *
2	Audio input B (right)	Standard level: 0.5 Vrms Input impedance: More than 10 k ohms *
3	Audio output A (left)	Standard level: 0.5 Vrms Output impedance: Less than 1 k ohm *
4	GND for audio	GND
5	GND for blue input	GND
6	Audio input A (left)	Standard level: 0.5 Vrms Input impedance: More than 10 k ohms *
7	Blue input	0.7 V ±3 dB, 75 ohms
8	Function select (AV control)	High state (9.5 – 12 V): Peri mode Low state (0 – 2 V): TV mode Input impedance: More than 10 k ohms Input capacitance: Less than 2 nF

Pin No.	Signal	Description
9	GND for green input	GND
10	NC	
11	Green input	(Same as Pin 7)
12	NC	
13	GND for red input	GND
14	GND for blanking input	GND
15	Red input	(Same as Pin 7)
16	Blanking input	High state (1 – 3 V) Low state (0 – 0.4 V) Input impedance: 75 ohms
17	GND for video output	GND
18	GND for video input	GND
19	Video output * *	1 V ± 3 dB, 75 ohms Sync: 0.3 V (±3 dB)
20	Video input	1 V ±3 dB, 75 ohms Sync: 0.3 V (±3 dB)
21	Common GND (plug, shield)	GND

* at 20Hz – 20 kHz

* * Outputs the video signal fed through the LINE A connector, when the AV input mode is selected.

Design and specifications subject to change without notice.

TABLE OF CONTENTS

Section Title Page

1. GENERAL

1–1. Features ········· 4
1–2. Location and Function of Parts and Controls ········· 5

2. DISASSEMBLY

2–1. Rear Cover and Top Cover Removal ········· 9
2–2. Terminal Board Removal ········· 9
2–3. Bracket of Terminal Board Removal ········· 10
2–4. Control Unit Removal ········· 10
2–5. Note on Wiring the Troidal Coil and It's Peripheral Part ········· 10
2–6. Picture Tube Removal ········· 11

3. SET-UP ADJUSTMENTS

3–1. Beam Landing ········· 12
3–2. Convergence ········· 13
3–3. Focus ········· 14
3–4. White Balance ········· 15
4. SAFETY RELATED ADJUSTMENTS ········· 16

Section Title Page

5. CIRCUIT ADJUSTMENTS

5–1. A Board Adjustments ········· 18
5–2. XA Board Adjustment ········· 21
5–3. BA Board Adjustments ········· 22

6. DIAGRAMS

6–1. Frame Schematic Diagram ········· 25
6–2. Block Diagrams ········· 27
6–3. Printed Wiring Boards ········· 36
6–4. Circuit Boards Location ········· 41
6–5. Schematic Diagram ········· 41
6–6. Semiconductors ········· 69

7. EXPLODED VIEWS

7–1. Chassis ········· 71
7–2. Picture Tube ········· 72
8. ELECTRICAL PARTS LIST ········· 73

WARNING !!

AN ISOLATION TRANSFORMER SHOULD BE USED DURING ANY SERVICE TO AVOID POSSIBLE SHOCK HAZARD, BECAUSE OF LIVE CHASSIS.
THE CHASSIS OF THIS RECEIVER IS DIRECTLY CONNECTED TO THE AC POWER LINE.

SAFETY-RELATED COMPONENT WARNING !!

COMPONENTS IDENTIFIED BY SHADING AND MARK ⚠ ON THE SCHEMATIC DIAGRAMS, EXPLODED VIEWS AND IN THE PARTS LIST ARE CRITICAL TO SAFE OPERATION. REPLACE THESE COMPONENTS WITH SONY PARTS WHOSE PART NUMBERS APPEAR AS SHOWN IN THIS MANUAL OR IN SUPPLEMENTS PUBLISHED BY SONY. CIRCUIT ADJUSTMENTS THAT ARE CRITICAL TO SAFE OPERATION ARE IDENTIFIED IN THIS MANUAL. FOLLOW THESE PROCEDURES WHENEVER CRITICAL COMPONENTS ARE REPLACED OR IMPROPER OPERATION IS SUSPECTED.

SECTION 1
GENERAL

1-1. FEATURES

This chart shows the various features which your model has (indicated as "Yes").

Features	PVM-1444QM	PVM-1442QM	PVM-1440QM
Automatic white balance circuit	Yes	Yes	Yes
EBU phosphor	Yes	Yes	No
Black-tinted Trinitron tube	No	No	Yes
Super Fine Pitch Trinitron picture tube	Yes	Yes	No
Analog RGB/component input/output	Yes	No	No
Analog RGB input/output	No	Yes	No
Digital RGB input (9-pin)	No	Yes	No
Y/C input (4-pin DIN)	Yes	Yes	Yes
VTR input (8-pin)	Yes	Yes	Yes
Control S input/output	Yes	Yes	No
Automatic release of BNC-type input connector termination	Yes	Yes	Yes
Color systems available	PAL, SECAM, NTSC$_{3.58}$ NTSC$_{4.43}$		
Comb filter	Yes	Yes	Yes
Blue only mode	Yes	Yes	Yes
Underscan mode	Yes	Yes	No
Horizontal/vertical delay mode	Yes	Yes	No
External sync input/output	Yes	Yes	No
Color temperature selector	Yes	Yes	Yes
Light-touch picture adjustment buttons	Yes	Yes	No
AV (EURO-TV) connector (21-pin)	No	No	Yes
EIA standard 19-inch rack mounting	Yes	Yes	Yes

Automatic white balance circuit
The automatic white balance circuit compensates for the beam distortion, secular distortion of the cathode-ray tube, etc., and always reproduces the same white display on the screen. This allows an extended use of the monitor.

Super Fine Pitch Trinitron picture tube
(PVM-1444QM/1442QM only)
The Super Fine Pitch Trinitron picture tube (0.25 mm aperture grill) gives high resolution picture. Horizontal resolution is more than 600 TV lines at the center of the picture. When used as a character display, up to 2,000 characters (80 characters/line × 25 lines) can be displayed with great clarity.

Analog RGB/component connector (PVM-1444QM only)
Analog RGB and component signals of a video equipment can be input through this connector. The signals are selected by the COMPO/RGB selector on the rear panel.

Analog RGB connector (PVM-1442QM only)
Analog RGB signal of a video equipment can be input through this connector.

Digital RGB input connector (PVM-1442QM only)
Digital RGB signal from a microcomputer can be input through this connector.

Y/C input connector
The video signal split into the chrominance signal (C) and the luminance signal (Y) can be input through this connector, eliminating the interference between the two signals which tends to occur in a composite video signal and assuring the video quality.

VTR input connector
When connected to a VTR having the 8-pin TV connector, video and audio signals can be fed through this connector with a single cable.

Control S connector (except PVM-1440QM)
When this connector is connected to the "control S" output of other equipment, the remote controls of the aperture, brightness, chroma, phase, contrast and volume settings are possible.

Automatic release of BNC-type connector termination
The BNC-type input connector is terminated at 75 ohms inside when the BNC-type output connector is open. When a cable is connected to the BNC-type output connector, the 75-ohm termination is automatically released, and the signal input through the IN connector is output from the corresponding OUT connector.

Four color systems available
The monitor can display PAL, SECAM, NTSC$_{3.58}$ and NTSC$_{4.43}$* signals. The appropriate color system is selected automatically.

- * A signal of NTSC$_{4.43}$ is obtained by playing back NTSC-recorded video cassettes with a video tape recorder/player especially designed for use with this system.

Comb Filter
When NTSC video signals are received, a comb filter activates to increase the resolution, resulting in fine picture detail without color spill or color noise.

Blue only mode
In the blue only mode, an apparent monochrome display is obtained with all three cathodes driven with a blue signal. This facilitates color saturation and phase adjustments and observation of VTR noise.

Underscan mode (except PVM-1440QM)
The signal normally scanned outside of the screen can be monitored in the underscan mode.

Note

The bright scanning lines which may appear on the top edge of the screen when the monitor is in the underscan mode are caused by an internal test signal, rather than the input signal.

Horizontal/vertical delay mode (except PVM-1440QM)
The horizontal and vertical sync signals can be checked simultaneously in the H/V delay mode.

External sync input (except PVM-1440QM)
When the EXT SYNC (or ANALOG/DIGITAL (EXT SYNC)) button is depressed, the monitor can be operated on the sync signal supplied from an external sync generator.

Color temperature selector
Color temperature of either 9,300°K or 6,500°K is selectable with the COLOR TEMP selector. For precise adjustment, use the BIAS and GAIN adjustment controls (except PVM-1440QM).

Light-touch picture adjustment buttons (except PVM-1440QM)
The aperture, brightness, chroma, phase, contrast and volume buttons can be adjusted by touching the buttons lightly. The adjusted settings will be stored in memory even when the monitor is turned off.

AV (EURO-TV) connector (PVM-1440QM only)
Analog RGB signals can be input through the 21-pin AV (EURO-TV) connector. This allows connection of peripheral equipments such as decoders.

Superimposition (PVM-1440QM only)
The data fed through the AV (EURO-TV) connector can be superimposed on the picture from the LINE A, LINE B or Y/C/VTR input.

EIA standard 19-inch rack mounting
By using an optional MB-502A mounting bracket, the monitor can be mounted in an EIA standard 19-inch rack. An optional SLR-102 slide rail is also available. For details on mounting, see the appropriate instruction manual.

1-2. LOCATION AND FUNCTION OF PARTS AND CONTROLS

Front panel PVM-1444QM

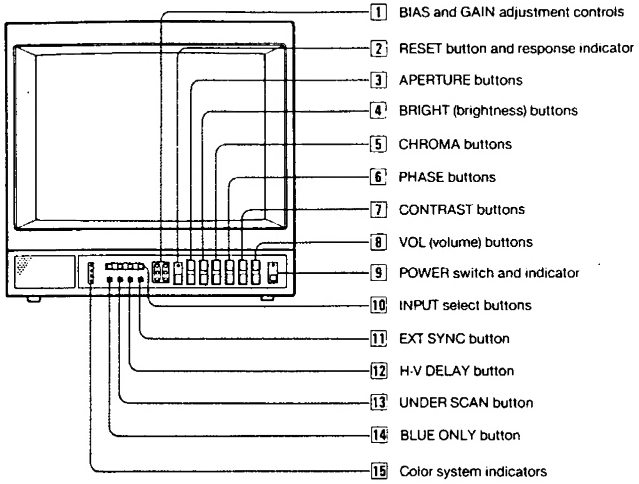
1 BIAS and GAIN adjustment controls
2 RESET button and response indicator
3 APERTURE buttons
4 BRIGHT (brightness) buttons
5 CHROMA buttons
6 PHASE buttons
7 CONTRAST buttons
8 VOL (volume) buttons
9 POWER switch and indicator
10 INPUT select buttons
11 EXT SYNC button
12 H-V DELAY button
13 UNDER SCAN button
14 BLUE ONLY button
15 Color system indicators

Front panel PVM-1442QM

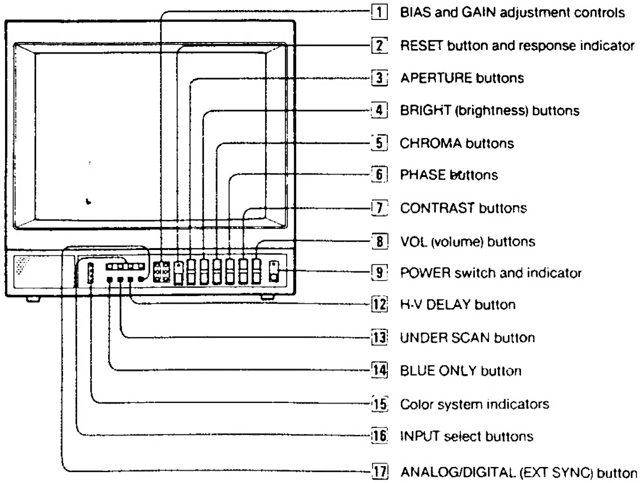
1 BIAS and GAIN adjustment controls
2 RESET button and response indicator
3 APERTURE buttons
4 BRIGHT (brightness) buttons
5 CHROMA buttons
6 PHASE buttons
7 CONTRAST buttons
8 VOL (volume) buttons
9 POWER switch and indicator
12 H-V DELAY button
13 UNDER SCAN button
14 BLUE ONLY button
15 Color system indicators
16 INPUT select buttons
17 ANALOG/DIGITAL (EXT SYNC) button

1 BIAS and GAIN adjustment controls

Used for white balance adjustment.
Gain and BIAS controls are provided for the R (red), G (green) and B (blue) screens.

BIAS: Adjust the white balance and brightness of the screen at the lowlight with these controls.

GAIN: Adjust the white balance and contrast of the screen at the highlight with these controls.

2 RESET button and response indicator

Press to return the PHASE, CHROMA, BRIGHT and APERTURE control settings to the factory set levels.
The response indicator flashes when the above buttons or the RESET button is pressed.

3 APERTURE buttons

Press + for more sharpness or – for less.

4 BRIGHT (brightness) buttons

Press + for more brightness or – for less.

5 CHROMA buttons

Press + for more color intensity or – for less.

6 PHASE buttons

This button is effective only for the NTSC$_{3.58}$ and NTSC$_{4.43}$ color system.
Press GRN (green) to make the skin tones greenish or PUR (purple) to make them purplish.

Note

The APERTURE, CHROMA, PHASE control settings have no effect on the pictures of analog RGB or digital RGB signals.

7 CONTRAST buttons

Press + to make the contrast, color intensity and brightness stronger or – to make them weaker.

8 VOL (volume) buttons

Press + for more volume or – for less.

9 POWER switch and indicator

Depress to turn the monitor on.
The indicator will light up in green.
Press the switch again to turn the monitor off.

10 INPUT select buttons

Press to select the program to be monitored.

A: for a signal fed through the LINE A connectors.

B: for a signal fed through the LINE B connectors.

Y/C/VTR: for a signal fed through the Y/C-INPUT connectors or VTR connector.
When both the Y/C-INPUT and VTR connectors are connected to video equipment, the input signal fed through the Y/C-INPUT connector has priority over the one fed through the VTR connector.

ANALOG RGB/COMPONENT: for a signal fed through the ANALOG RGB/COMPONENT connectors.
For connection, refer to the explanation of ANALOG RGB/COMPONENT connectors

11 EXT SYNC (external sync) button

Normally keep this button released (INT). The monitor operates on the sync signal from the displayed composite video signal.
To operate the monitor on an external sync signal fed through the EXT SYNC connector on the rear panel, depress the button (EXT).

12 H-V DELAY button

Depress to observe the horizontal and vertical sync signals at the same time.
The horizontal sync signal is displayed in the left quarter of the screen; the vertical signal is displayed near the center of the screen.

13 UNDER SCAN button

Depress for underscanning. The display size is reduced by approximately 3% so that four corners of the raster are visible.

14 BLUE ONLY button

Depress to turn off the red and green signals. A blue signal is displayed as an apparent monochrome picture on the screen. This facilitates "chroma" and "phase*" control adjustments and observation of VTR noise.

* "Phase" control adjustment is effective only for the NTSC signals.

15 Color system indicators

The indicator of the color system being received lights up in red.

16 INPUT select buttons

Press to select the program to be monitored.

A: for a signal fed through the LINE A connectors.

B: for a signal fed through the LINE B connectors.

Y/C/VTR: for a signal fed through the Y/C-INPUT connectors or VTR connector.
When both the Y/C-INPUT and VTR connectors are connected to video equipment, the input signal fed through the Y/C-INPUT connector has priority over the one fed through the VTR connector.

RGB: for a signal fed through the ANALOG RGB connectors or DIGITAL RGB connector.

17 ANALOG/DIGITAL (EXT SYNC) button

This button functions as ANALOG/DIGITAL selector and EXT SYNC selector.

As ANALOG/DIGITAL selector

Depress to monitor a signal fed through the ANALOG RGB connectors.
Release to monitor a signal fed through the DIGITAL RGB connector.

For EXT SYNC selector

Depress to operate the monitor on an external sync signal fed through the EXT SYNC connector on the rear panel (EXT).
Release to operate the monitor on the sync signal from the displayed composite video signal (INT).

Front panel PVM-1440QM

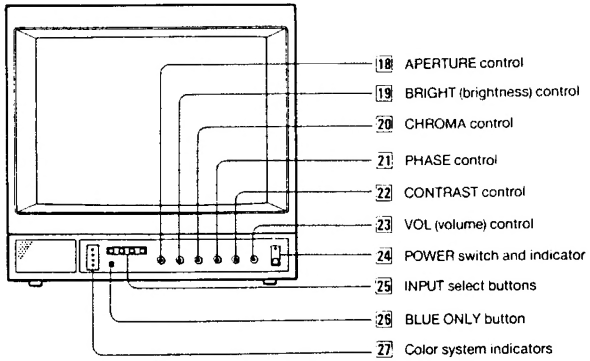

18 APERTURE control
Turn toward + for more sharpness or toward – for less.

19 BRIGHT (brightness) control
Turn toward + for more brightness or toward – for less. Normally set this control at the center detent position.

20 CHROMA control
Turn toward + for more color intensity or toward – for less.

21 PHASE control
Turn toward GRN (green) to make the skin tones greenish or toward PUR (purple) to make them purplish.

Note

The APERTURE, CHROMA, PHASE control settings have no effect on the pictures input through the ANALOG RGB IN connector.

22 CONTRAST control
Turn toward + to make the contrast, color intensity and brightness stronger or toward – to make them weaker.

23 VOL (volume) control
Turn toward + for more volume or toward – for less.

24 POWER switch and indicator
Same as 9.

25 INPUT select buttons
Press to select the program to be monitored.

A: for a signal fed through the LINE A connectors.

B: for a signal fed through the LINE B connectors.

Y/C/VTR: for a signal fed through the Y/C-INPUT connectors or VTR connector.
When both the Y/C-INPUT and VTR connectors are connected to video equipment, the input signal fed through the Y/C-INPUT connector has priority over the one fed through the VTR connector.

AV: for a signal fed through the AV (EURO-TV) connector.
To superimpose the data fed through the AV (EURO-TV) connector over the picture being displayed:

1 Press A, B or Y/C/VTR to display the picture on which the data is to be superimposed.
Be sure the SUPERIMPOSE selector on the rear panel is set to ON.
2 Press AV.
The data is superimposed over the picture.

26 BLUE ONLY button
Same as 14.

27 Color system indicators
Same as 15.

Picture Adjustment Buttons

The picture adjustment buttons of each monitor operate in the following input mode (indicated as "Yes").

Model	Input mode	APERTURE	BRIGHT	CHROMA	PHASE	CONTRAST	VOL
PVM-1444QM	• LINE A, LINE B • Y/C • VTR	Yes	Yes	Yes	Yes (NTSC only)	Yes	Yes
	Analog RGB	No	Yes	No	No	Yes	Yes
	Component	Yes	Yes	Yes	No	Yes	Yes
PVM-1442QM	• LINE A, LINE B • Y/C • VTR	Yes	Yes	Yes	Yes (NTSC only)	Yes	Yes
	• Digital RGB • Analog RGB	No	Yes	No	No	Yes	No
PVM-1440QM	• LINE A, LINE B • Y/C • VTR	Yes	Yes	Yes	Yes (NTSC only)	Yes	Yes
	AV (RGB signal only)	No	Yes	No	No	Yes	No

Rear panel PVM-1444QM

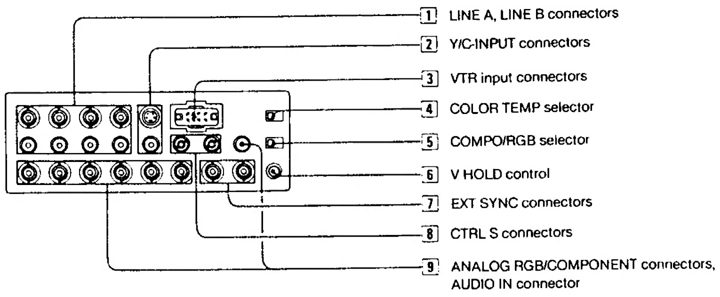
1 LINE A, LINE B connectors
2 Y/C-INPUT connectors
3 VTR input connectors
4 COLOR TEMP selector
5 COMPO/RGB selector
6 V HOLD control
7 EXT SYNC connectors
8 CTRL S connectors
9 ANALOG RGB/COMPONENT connectors, AUDIO IN connector

Rear panel PVM-1442QM

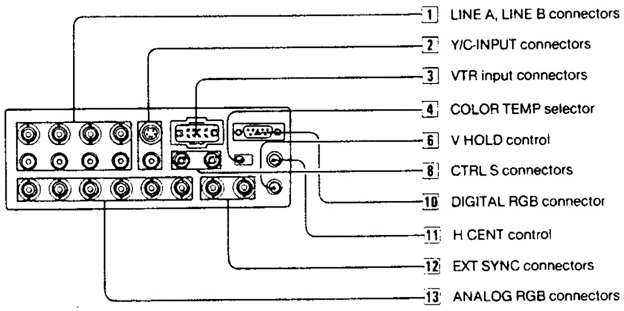
1 LINE A, LINE B connectors
2 Y/C-INPUT connectors
3 VTR input connectors
4 COLOR TEMP selector
6 V HOLD control
8 CTRL S connectors
10 DIGITAL RGB connector
11 H CENT control
12 EXT SYNC connectors
13 ANALOG RGB connectors

Rear panel PVM-1440QM

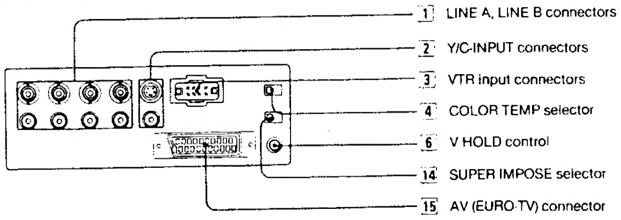
1 LINE A, LINE B connectors
2 Y/C-INPUT connectors
3 VTR input connectors
4 COLOR TEMP selector
6 V HOLD control
14 SUPER IMPOSE selector
15 AV (EURO-TV) connector

1 LINE A, LINE B connectors

Two groups (A and B) of line input connectors for the composite video and audio signals and their loop-through output connectors.

To monitor the input signal fed through these connectors, press the A or B input select button on the front panel.

VIDEO IN (BNC type): Connect to the video output of a video equipment, such as a VTR or a color video camera. For a loop-through connection, connect to the video output of another monitor.

VIDEO OUT (BNC type): Loop-through output of the VIDEO IN connector. Connect to the video input for a VTR or another monitor.
When the cable is connected to this connector, the 75-ohms termination of the input is automatically released, and the signal input to the VIDEO IN connector is output from this connector.

AUDIO IN (phono jack): Connect to the audio output of a VTR or to a microphone via a suitable microphone amplifier. For a loop-through connection, connect to the audio output of another monitor.

AUDIO OUT (phono jack): Loop-through output of the AUDIO IN jack. Connect to the audio input of a VTR or another monitor.

2 Y/C-INPUT connectors (4-pin)

VIDEO: Connect to the Y/C separate output of a video camera or a VTR.

AUDIO: Connect to the audio output of a video camera or a VTR.

To monitor the input signal fed through these connectors, press the Y/C/VTR button on the front panel.

3 VTR input connectors (8-pin)

Line input for the video and audio signals. When connected to the 8-pin TV connector of a VTR, the video and audio playback signal from the VTR can be input through a single cable.

To monitor the input signal fed through this connector, press the Y/C/VTR button on the front panel, with the Y/C-INPUT connectors connected to no outputs.

When both VTR and Y/C-INPUT connectors are connected to video equipment, the input signal fed through the Y/C-INPUT connectors has priority over the one fed through the VTR connectors.

4 COLOR TEMP (temperature) selector

Select the color temperature position, 9300°K or 6500°K.

5 COMPO (component)/RGB selector

Set to COMPO to monitor component signal fed through the R/R-Y, G/Y, B/B-Y connectors.

Set to RGB to monitor analog R/G/B signal fed through the R/R-Y, G/Y, B/B-Y connectors.

6 V HOLD (vertical hold) control

Turn to stabilize the picture if it rolls vertically.

7 EXT SYNC (external sync) connectors (BNC type)

IN: Connect to the output of a sync generator.
To use the sync signal fed through this connector, depress the EXT SYNC button.

OUT: Loop-through output of the SYNC IN connector.
Connect to the SYNC input of a video camera.
When the cable is connected to this monitor, the 75-ohms termination of the input is released, and the signal input to the IN connector is output from this connector.

8 CTRL S (control S) connectors (minijack)

For remote control of the APERTURE, BRIGHT, CHROMA, PHASE, CONTRAST and VOL control buttons.

IN: Connect to the "control S" output of other equipment.

OUT: Connect to the CTRL S IN connector of another monitor by using a connecting cord (miniplug↔miniplug).

9 ANALOG RGB/COMPONENT connectors (BNC type)

R/R-Y IN, G/Y IN, B/B-Y IN:

To monitor the analog R/G/B signal, connect to the analog R/G/B signal outputs of a video camera having no sync signal.
Set the COMPO/RGB selector on the rear panel to RGB and press the ANALOG RGB/COMPONENT button on the front panel. When the EXT SYNC button is released, the monitor operates on the sync signal from the G channel.

To monitor the component signal, connect to the R-Y/Y/B-Y component signal outputs of a BETACAM video camera. Set the COMPO/RGB selector on the rear panel to COMPO and press the ANALOG RGB/COMPONENT button on the front panel. When the EXT SYNC button is released, the monitor operates on the sync signal from the Y channel.

R/R-Y OUT, G/Y OUT, B/B-Y OUT:

Loop-through outputs of the R/R-Y IN, G/Y IN, B/B-Y IN connectors.

For R/G/B signal, connect to the analog R/G/B signal inputs of a video camera.

For component signal, connect to the R-Y/Y/B-Y component signal inputs of a BETACAM video camera.

When the cables are connected to these connectors, the 75-ohms termination of the input is automatically released, and the signal inputs to the R/R-Y IN, G/Y IN, B/B-Y IN connectors are output from these connectors.

AUDIO IN: Connect to the audio output of video equipment when the analog R/G/B or component signal is input.

10 DIGITAL RGB connector (9-pin)

Connect with a microcomputer having a digital (TTL level) RGB video output.
To monitor the input signal fed through this connector, press the RGB button and keep the ANALOG/DIGITAL (EXT SYNC) button released.

Note

For connection, be sure to use an optional SMF-520 connecting cable.

11 H CENT (horizontal centering) control

When a digital R/G/B signal is monitored, turn to center the picture if it is decentered.

12 EXT SYNC (external sync) connectors (BNC type)

IN: Connect to the output of a sync generator.
To monitor the sync signal fed through this connector, depress the ANALOG/DIGITAL (EXT SYNC) button.

OUT: Loop-through output of the SYNC IN connector.
Connect to the SYNC input of a video camera.
When the cable is connected to this connector, the 75-ohms termination of the input is released, and the signal input to the IN connector is output from this connector.

13 ANALOG RGB connectors (BNC type)

R/G/B IN: Connect to the analog R/G/B outputs of a video camera.
To monitor a signal fed through these connectors, press the RGB button and depress the ANALOG/DIGITAL (EXT SYNC) button.

R/G/B OUT: Loop-through outputs of the R/G/B IN connectors. Connect to the analog R/G/B inputs of a video camera.
When the cable is connected to these connectors, the 75-ohms termination of the input is released, and the signal input to the R/G/B IN connectors is output from these connectors.

14 SUPERIMPOSE selector

Normally set to ON.
Set to OFF to display the analog RGB signal fed through the AV (EURO-TV) connector.

15 AV (EURO-TV) connector (21-pin)

Connect to the 21-pin multiconnector of decoders.

SECTION 2
DISASSEMBLY

2-1. REAR COVER AND TOP COVER REMOVAL

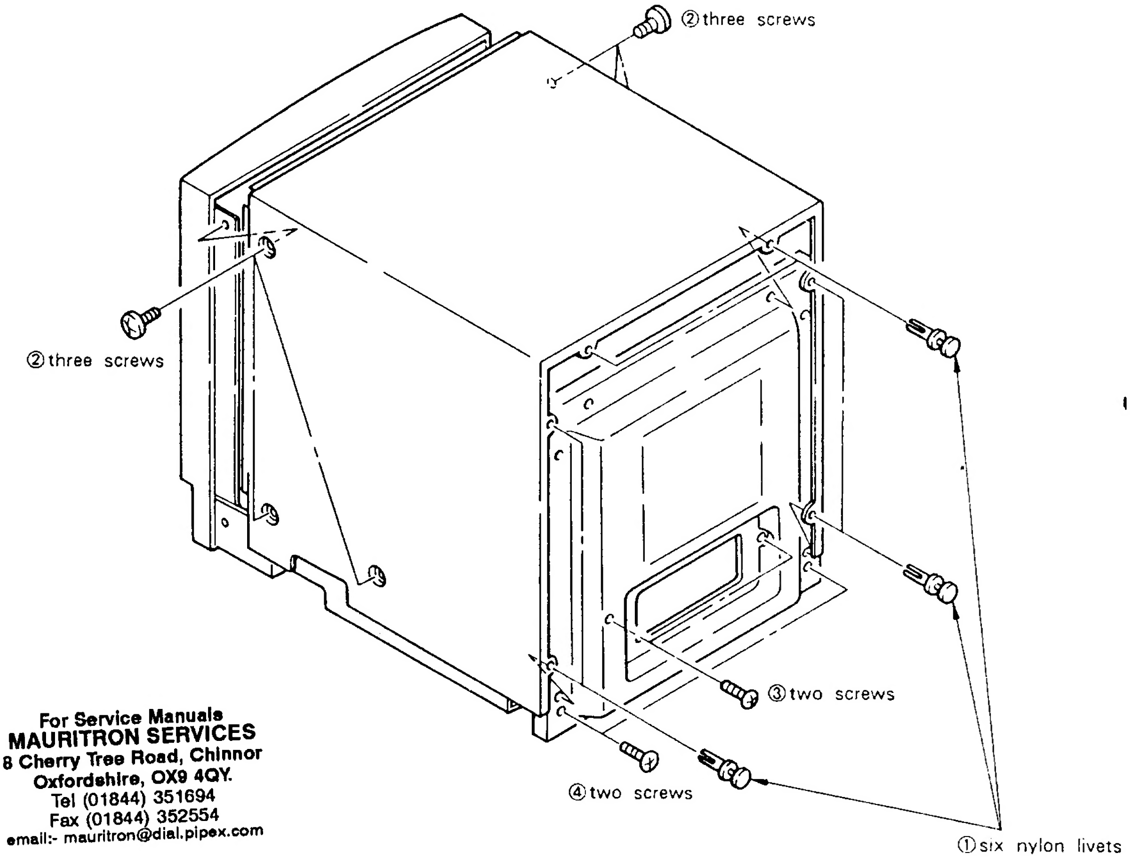
②three screws
②three screws
③two screws
④two screws
①six nylon livets

For Service Manuals
MAURITRON SERVICES
8 Cherry Tree Road, Chinnor
Oxfordshire, OX9 4QY.
Tel (01844) 351694
Fax (01844) 352554
email:- mauritron@dial.pipex.com

2-2. TERMINAL BOARD REMOVAL

Note : When you remove terminal board, pull out A board a short distance.

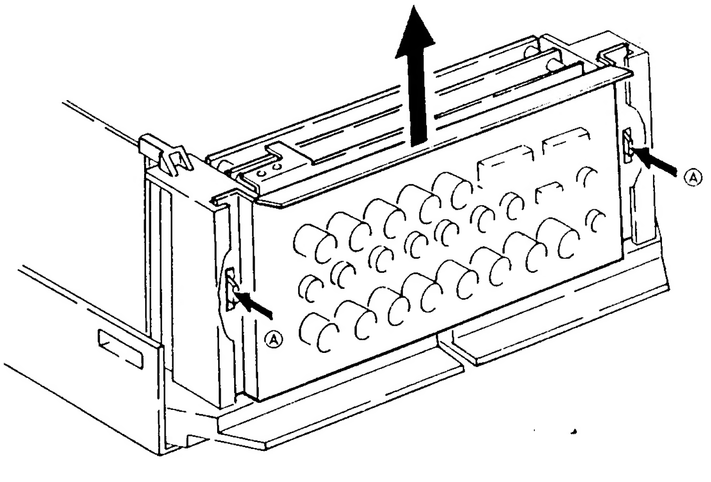

①Remove the terminal board as arrow Ⓑ
while push the two claws as arrow Ⓐ.

2-3. BRACKET OF TERMINAL BOARD REMOVAL

①Remove the bracket of terminal board as arrow Ⓑ while extend two claws as arrow Ⓐ.

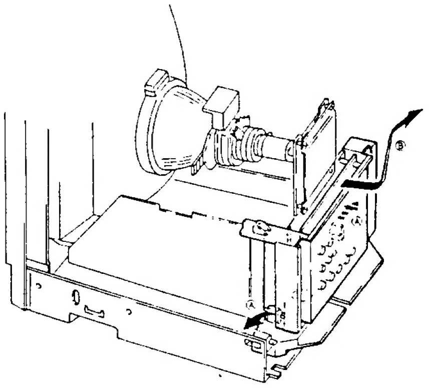

2-4. CONTROL UNIT REMOVAL

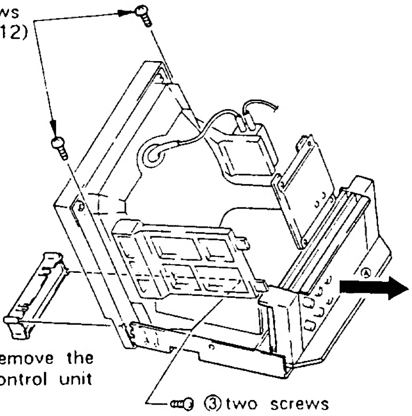

②four screws (BVTP3×12)

①Pull out the cabinet of bottom as arrow Ⓐ.

④Remove the control unit

③two screws

2-5. NOTE ON WIRING THE TROIDAL COIL AND IT'S PERIPHERAL PART

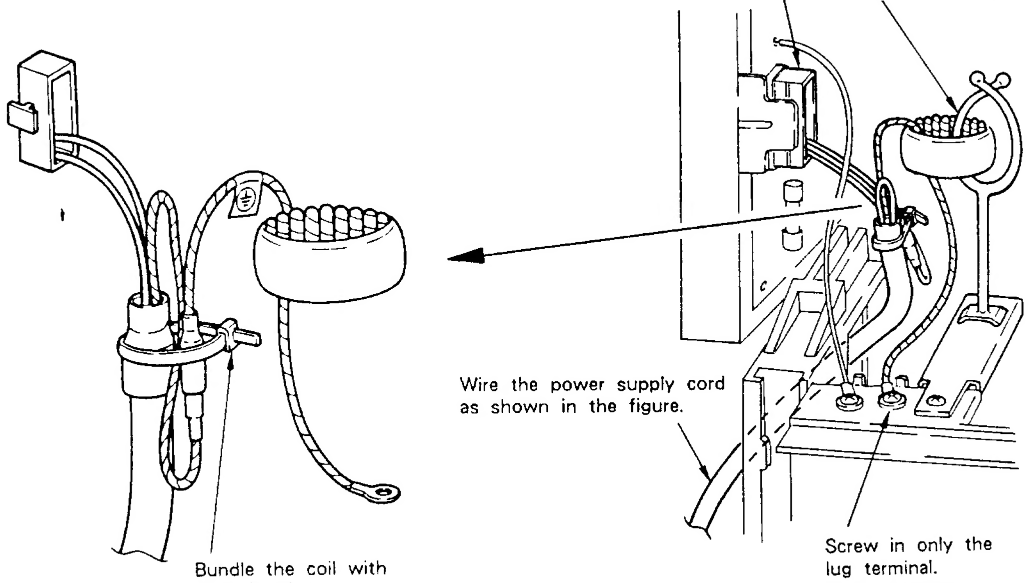

Fix the troidal coil with 15 mm dia. Pulse Lock.

Wire the power supply cord as shown in the figure.

Bundle the coil with a tie band.

Screw in only the lug terminal. Never connect the commom.

2-6. PICTURE TUBE REMOVAL

NOTE : Caution for ANODE CAP installation.

When you replace PICTURE TUBE or FBT, remove RTV on ANODE CAP so that PICTURE TUBE and FBT can be separated. Please adhere picture tube and anode cap in accordance with the following procedure.

ADHERING PROCEDURE OF ANODE CAP.

1. Clean PICTURE TUBE ANODE CAP with ethanol to remove original RTV.
2. Dry clean face with air.
3. Use KE-490RTV (RTV silicone adhesive, SHIN-ETSU CHEMICAL).

Part. No.	Description
7-322-065-19	Silicone (RTV) KE-490W

4. Install ANODE CAP.
5. Adeguately apply RTV to the entire picture tube anode area, piece the anode cap onto the picture tube and push it down securely so that no air pockets remain beneath the cap.
6. Dry more than 12 hours at room temperature.

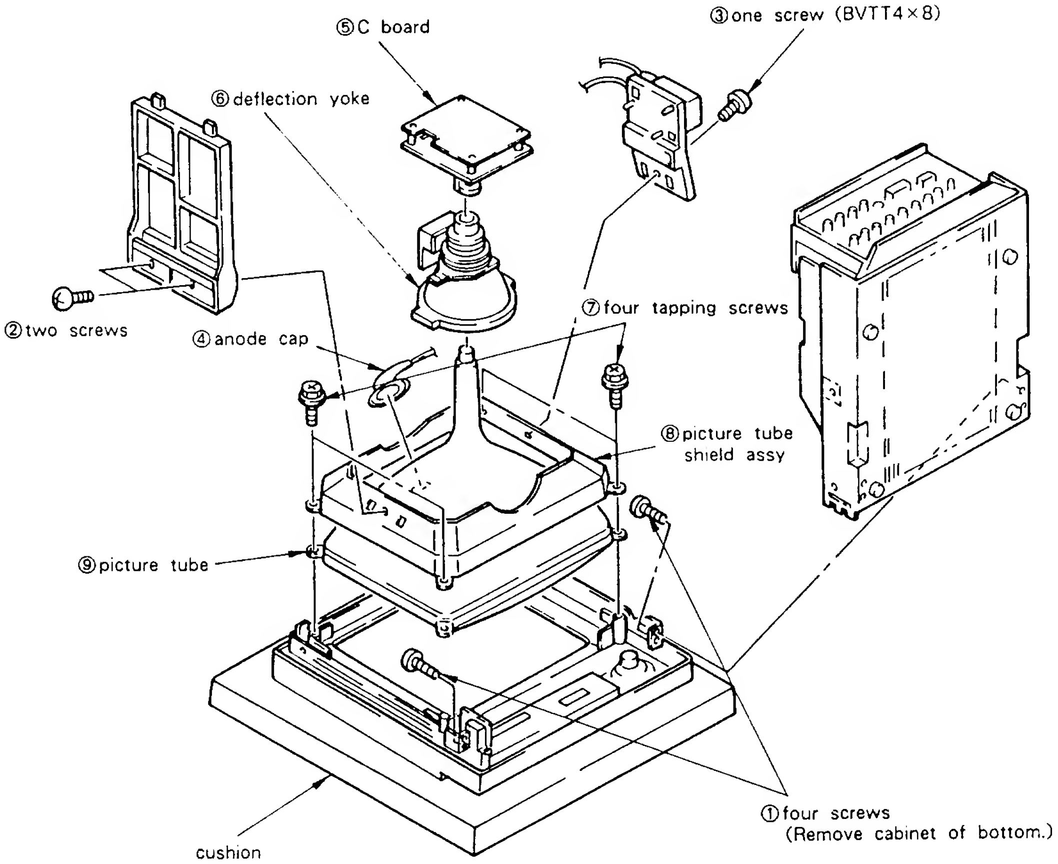
⑤C board
③one screw (BVTT4×8)
⑥deflection yoke
⑦four tapping screws
②two screws
④anode cap
⑧picture tube shield assy
⑨picture tube
①four screws (Remove cabinet of bottom.)
cushion

ANODE CAP REMOVAL

- **Removing Procedures**

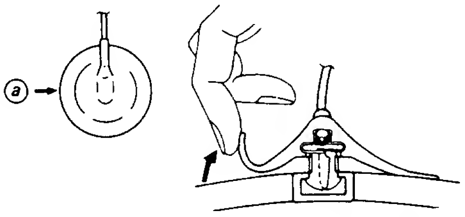

① *Turn up one side of the rubber cap in the direction indicated by the arrow ⓐ.*

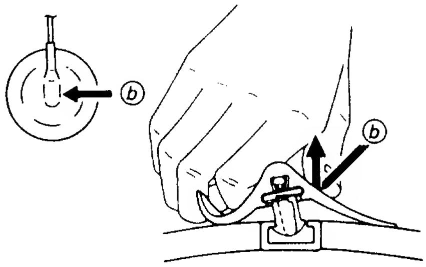

② *Using a thumb, pull up the rubber cap firmly in the direction indicated by the arrow ⓑ.*

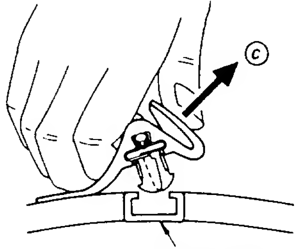
ⓒ
Anode button

③ *When one side of the rubber cap is separated from the anode button, the anode cap can be removed by turning up the rubber cap and pulling up it in the direction of the arrow ⓒ.*

SECTION 3

SET-UP ADJUSTMENTS

- The following adjustments should be made when a complete realignment is required or a new picture tube is installed.
- These adjustments should be performed with rated power supply voltage unless ontherwise noted.

The control and switch below should be set as follows unless otherwise noted :

CONTRAST control ········· 80%
BRIGHTNESS control ······· 50%

Perform the adjustments in order as follows :

3-1. Beam Landing
3-2. Convergence
3-3. Focus
3-4. White Balance

Note : Test Equipment Required.

1. Color Bar/Pattern Generator
2. Degausser
3. Color Annalyzer (Minolta)
4. Luminance Level Meter
5. Oscilloscope

Precaution

- Set the side of the unit with the PICTURE TUBE so that it faces east or west in order to reduce the influence of external magnetic force.
- Turn the power switch for the unit ON and erase the magnetic force using a degausser.

3-1. BEAM LANDING

1. Receive an entirely white signal with the pattern generator.
   CONTRAST ········· MAX.
   BRIGHTNESS ······· set easy to observe
2. Adjust the focus and the horizontal convengence roughly.
3. Loosen the deflection yoke mounting screw, and set the purity control to the center as shown in Fig. 3-1.
4. Switch over the pattern generator to green.
5. Move the deflection yoke backward, and adjust with the purity control so that green is in the center and blue and red are at the sides, evenly. (Fig. 3-2)
6. Move the deflection yoke forward, and adjust so that the entire screen becomes green. Repeat 5 to 7 as to red and blue.
7. When landing at the corners is not right, correct by using the magnet. (Fig. 3-3)
8. When the position of the deflection yoke is determined, tighten it with a deflection yoke mounting screw.

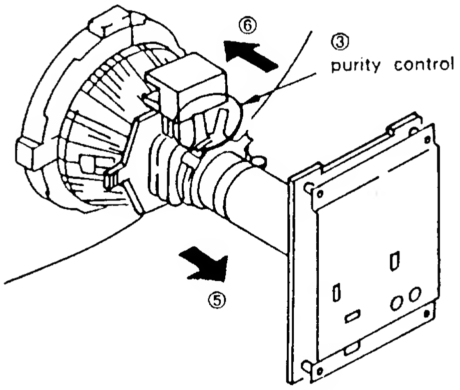
⑥
③
purity control
⑤

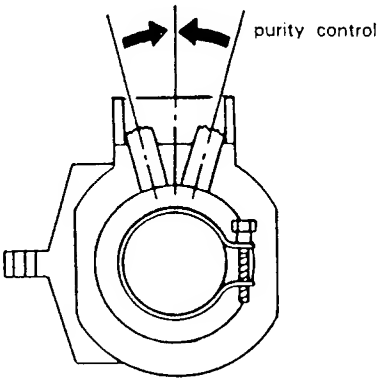
purity control

Fig. 3-1

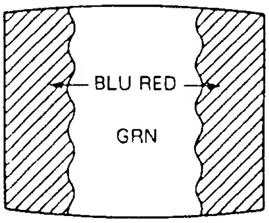

Fig. 3-2

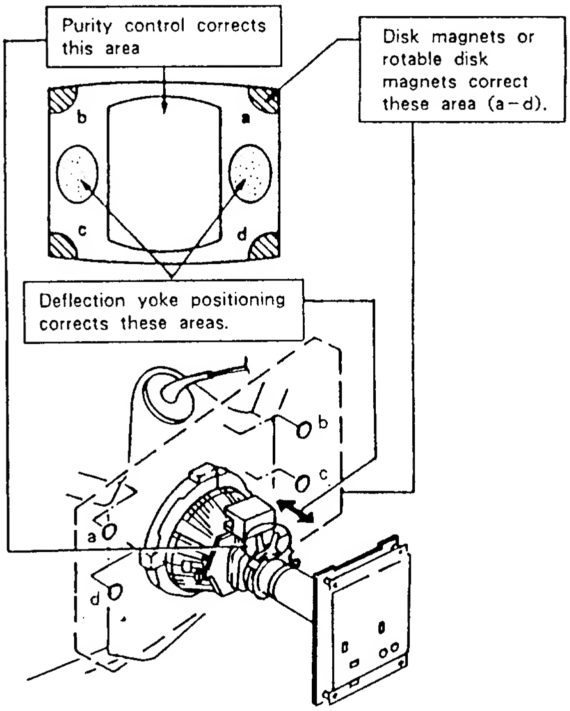
Purity control corrects this area
Disk magnets or rotable disk magnets correct these area (a-d).
b
a
c
d
Deflection yoke positioning corrects these areas.
b
c
a
d

Fig. 3-3

3-2. CONVERGENCE

(1) **Horizontal and Vertical Static Convergence Adjustment on the Center of Screen.**

- Before starting, perform V. SIZE, V. CENT, H. SIZE, H. CENT and Screen Distortion adjustment rightly.

(Static Convergence Adjustment)

1. Receive a dot signal and Set CONTRAST to normal.
2. Adjust H. STAT VR to coincide red, green and blue dots on the center of screen. (Horizontal movement)
3. Adjust V. STAT magnet to coincide red, green and blue dots on the center of screen. (Vertical movement)

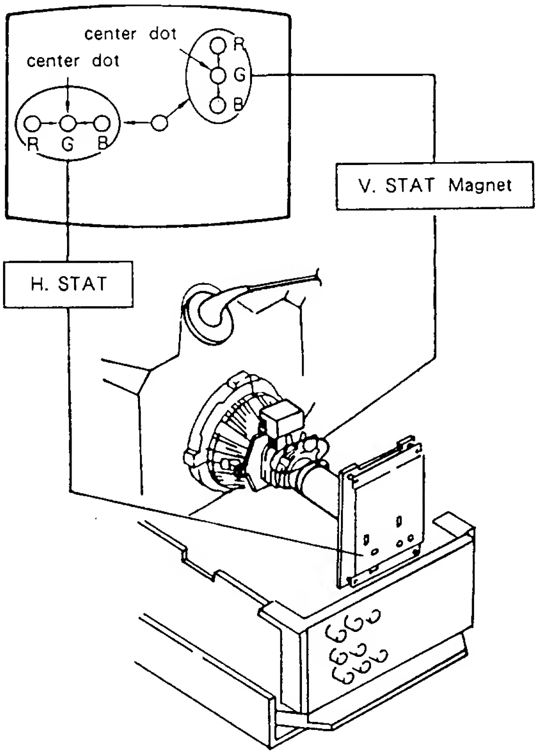
center dot
center dot
R
G
B
R G B
V. STAT Magnet
H. STAT

※ If the red, green and blue dots do not coincide on the center of screen with H. STAT VR, perform adjustment using V. STAT at the same time while tracking.
(Tilt the V. STAT magnet and adjust static convergence to open or close the V. STAT magnet.)

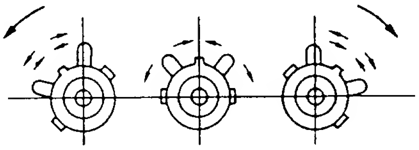

- When the V. STAT magnet is moved in the direction of arrow ⓐ and ⓑ, red, green and blue dots move as shown below.

① When moving the V. STAT Magnet open or close.

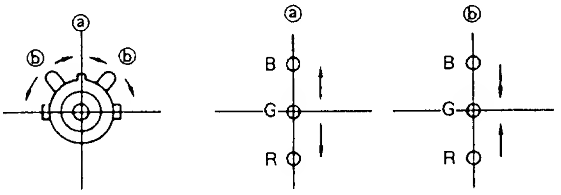

② When moving the V. STAT magnet counterclockwise.

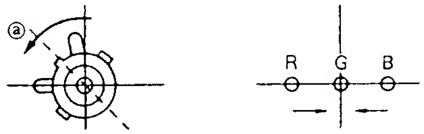

③ When moving the V. STAT magnet clockwise.

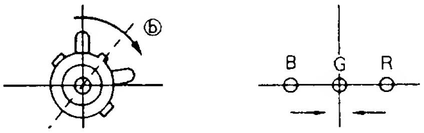

④ When tilt the V. STAT magnet and open or close.

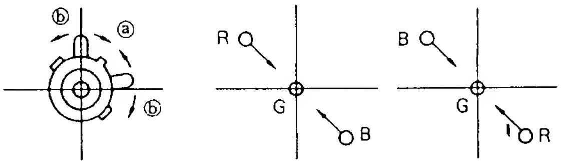

※ If the red and green dots do not coincide with blue dot, adjustment with BMC (6-poles) magnet.

- **HMC and VMC correction for BMC (6-Poles) magnet.**

1. HMC (Horizontal Misconvergence) correction and motion of the Electron Beam with the BMC (6-poles) magnet.

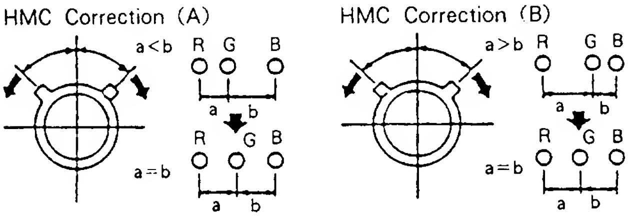
HMC Correction (A)
a<b
R G B
a b
R G B
a=b
a b
HMC Correction (B)
a>b
R G B
a b
R G B
a=b
a b

2. VMC (Vertical Misconvergence) correction and motion of the Electron Beam with the BMC (6-poles) magnet.

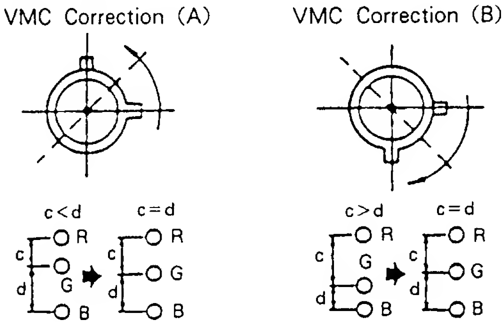
VMC Correction (A)
VMC Correction (B)
c<d
c=d
c
d
R
G
B
c>d
c=d
R
G
B

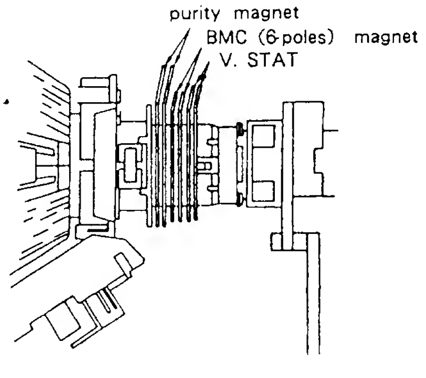
purity magnet
BMC (6-poles) magnet
V. STAT

(2) Horizontal and Vertical Dynamic Convergence Adjustment the environs of the Screen

(Dynamic Convergence Adjustment)

1. Loosen deflection yoke screw.
2. Remove deflection yoke spacers.
3. Move the deflection yoke for best convergence.
4. Tighten the deflection yoke screw.
5. Install the deflection yoke spacers.

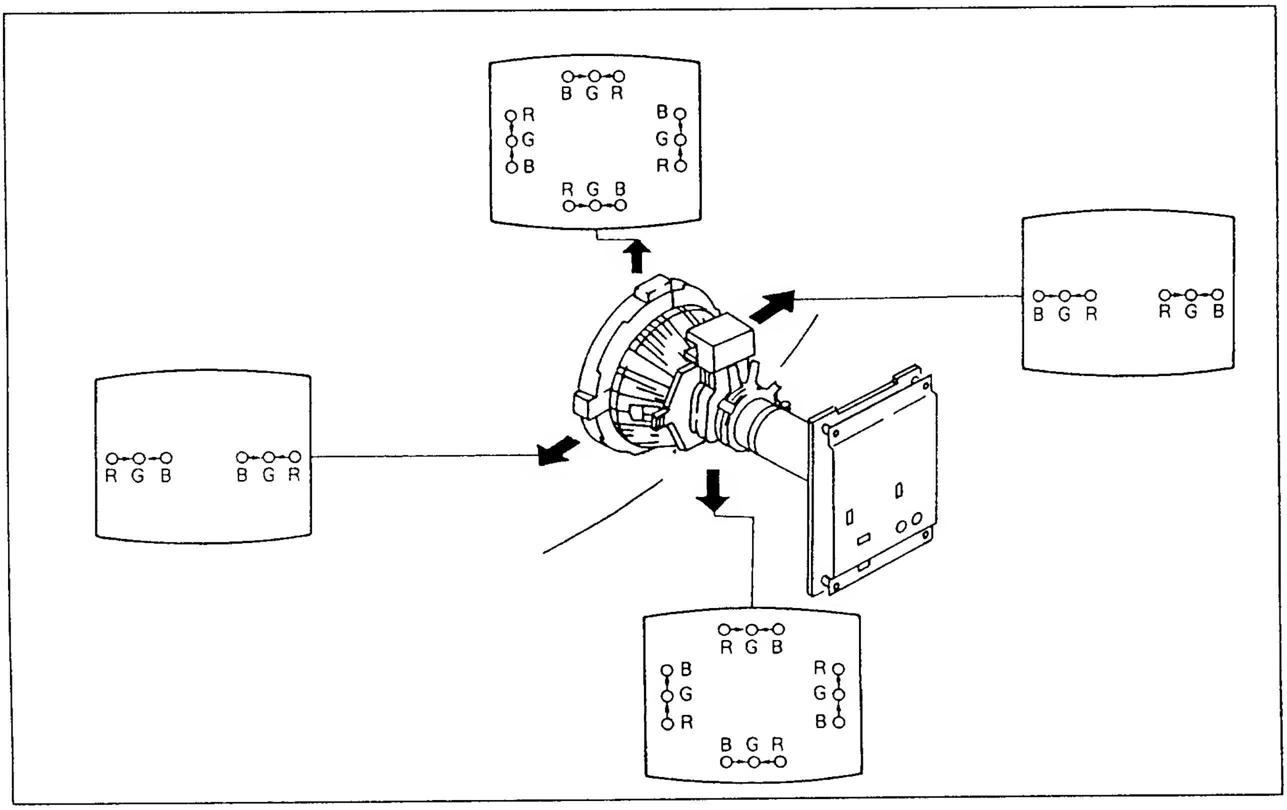
B G R
R G B
B G R
R G B
B G R
R G B
R G B
B G R
R G B
B G R
B G R
R G B

(3) Screen-corner Convergence

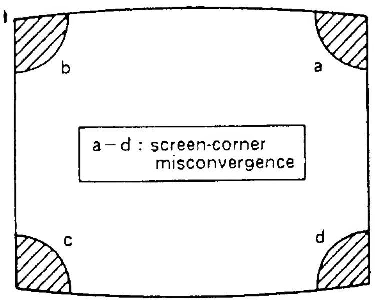
b
a
a – d : screen-corner misconvergence
c
d

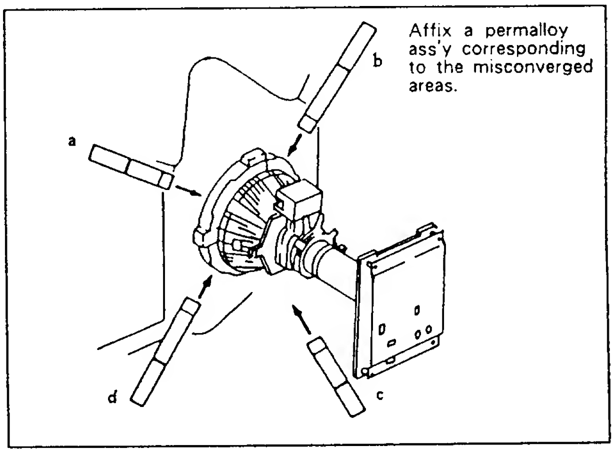

Affix a permalloy ass'y corresponding to the misconverged areas.

3–3. FOCUS

1. Receive the broadcast.
2. CONTRAST ········ Normal
3. Adjust RV707 so that the focus on the center of screen becomes to the best.

3–4. WHITE BALANCE

[Screen (G2) Voltage]

1. Receive a dot signal with the pattern generator.
2. Switch over COLOR TEMP to 6500° K.
3. Using oscilloscope, adjust with RV1710 (SUB BRT) on V board so that the green cathode voltage against ground becomes 160 V DC.
4. Similarly, adjust with RV1704 (B BKG) and RV1705 (R BKG) on V board so that the blue and red cathode voltages become 160 V DC.

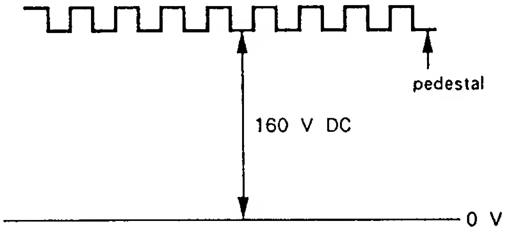

5. Observing the screen, adjust with RV709 (SCREEN) on C board so that the back-ground of the dot signal is bright dimly.

[White Balance]

1. Receive a color-bar pattern signal with the pattern generator, and to make black and white screen by chroma switch off.
2.
   - BRIGHTNESS ············ 50%
   - CONTRAST ··············· Minimum
   - CHROMA ··················· 50%
   - DRIVE volume
     (V BOARD) ·············· mechanical center
   - BKG volume
     (V BOARD) ·············· mechanical center
3. Adjust RV1710 (SUB BRIGHT) so that the blue stripe portion on the color-bar pattern signal is bright dimly.

color-bar pattern

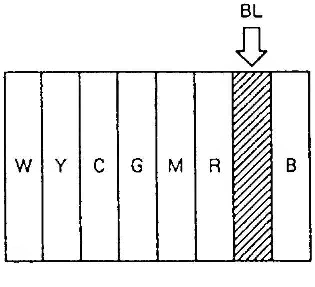

4. Receive an entirely white signal from the pattern generator.
5. CONTRAST ·················· 70%
6. Using the luminance level meter, adjust the luminance level of the pattern generator becomes 8 Nit. (The condition the screen is bright dimly.)
7. Adjust with the color analyzer the white balance.
8. Reset the luminance level of the pattern generator, and adjust the white balance. (High light condition.)

SECTION 4

SAFETY RELATED ADJUSTMENTS

CONFIRMATION WHEN REPLACING H.V.R (High Voltage Resistor)

The following adjustment should be confirm the output voltage when replacing HVR.

1. Receive an entire white signal.
2. • CONTRAST ············ Maximum
   • BRIGHTNESS ········· Maximum
3. Connect a digital multimeter to the A-20 connector side lead of R804.
4. Confirm the voltage is 14.1 ±1.0 V DC.

※R500, CONFIRMATION METHOD (HOLD-DOWN CONFIRMATION) AND READJUSTMENTS

The following adjustments should always be performed when replacing the following components.

IC501, Q503, Q504, Q505, Q506,
D509, D510, C505, C520, C524,
C525, C526, C527, C528, C529,
C530, C531, R500, R506, R516, } on A board
R517, R518, R519, R520, R521,
R522, R523, R524, R525, R526,
R528, R804, NL501, HVR

1. Receive an entire white signal.
2. • CONTRAST ············ Maximum
   • BRIGHTNESS ········· Maximum
3. Connect a digital multimeter to the A-20 connector side lead of R804.
4. Confirm the voltage is 14.1 ±1.0 V DC.
5. Receive a dot signal.
6. Disconnect A-22 connector (ABL JIG) on A board and connect an ammeter.
7. Adjust BRIGHTNESS and CONTRAST so that the current is 70 ±30 μA.
8. Apply an external DC voltage gradually to the A-20 connector side lead of R804, and when the voltage becomes 16.4 ±0.1 V DC, confirm the HOLD-DOWN circuit operates immediately and raster disappears.
9. With the same procedure of item 8, when the voltage becomes 15.8 ±0.1 V DC, confirm the HOLD-DOWN circuit doesn't operate.
10. Receive an entire white signal.
11. Adjust with BRIGHTNESS and CONTRAST volumes so that the current is 600 ±40 μA.
12. Apply DC voltage to the A-20 connector side lead of R804, and when the voltage becomes 15.8 ±0.1 V DC, confirm the HOLD-DOWN circuit operates immediately and raster disappears.
13. With the same procedure of item 8, when the voltage becomes 15.2 ±0.1 V DC, confirm the HOLD-DOWN circuit doesn't operate.
14. When step 4 to 13 is not satisfied, readjustment should be performed by altering the resistance value of R500 (※).

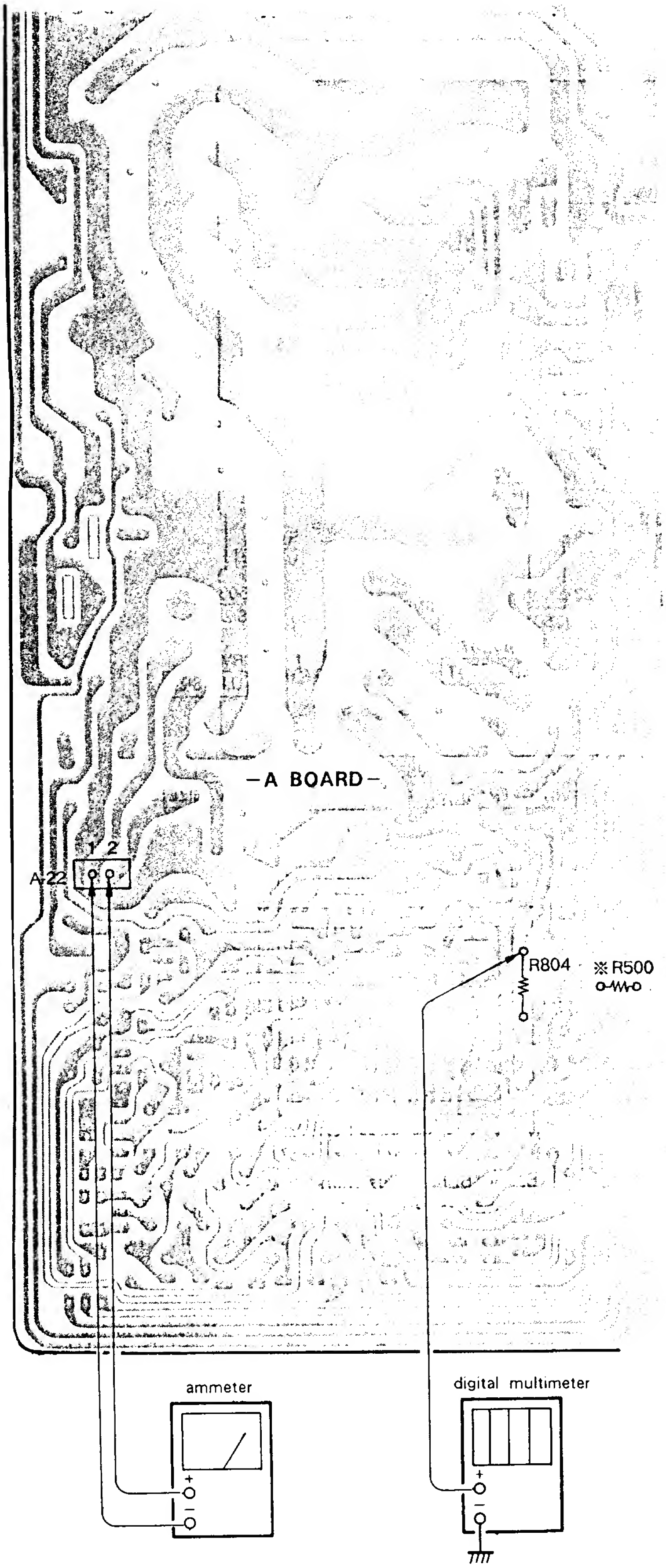
-A BOARD-
1 2
A-22
R804
※R500
ammeter
+
−
digital multimeter
+
−

SECTION 5
CIRCUIT ADJUSTMENTS

5–1. A BOARD ADJUSTMENTS

–A BOARD (COMPONENT SIDE) –

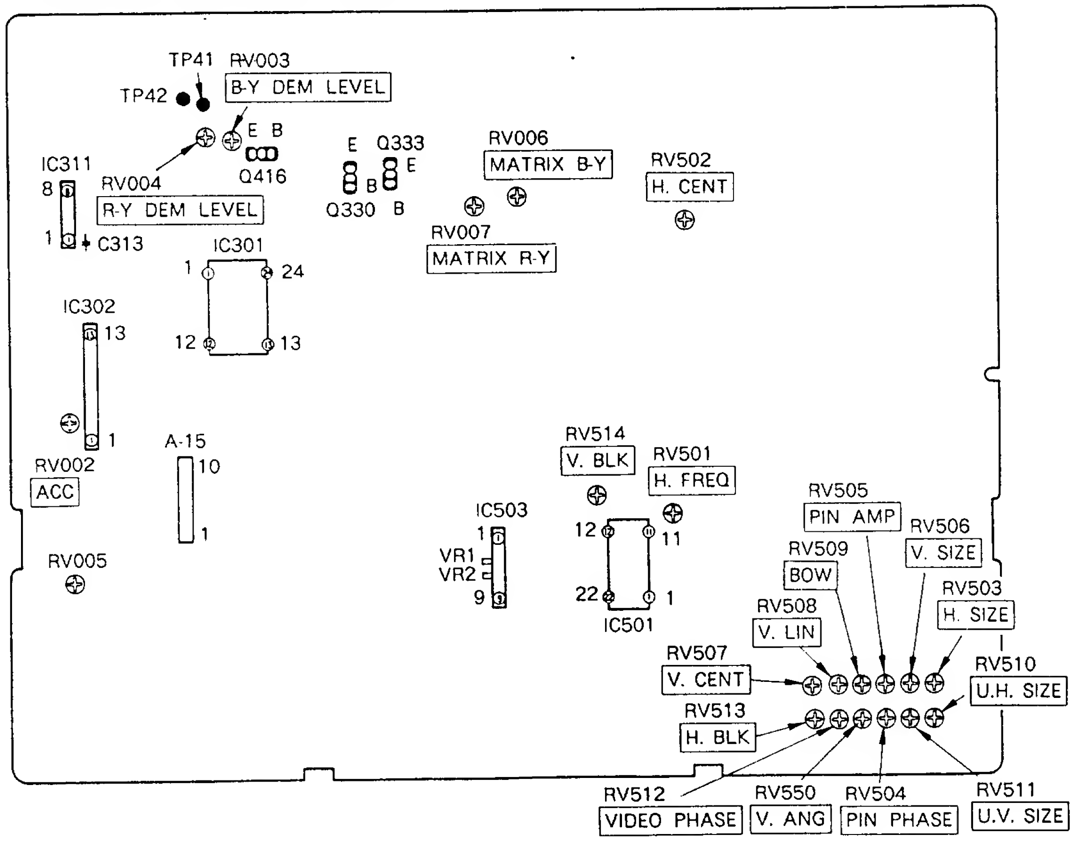
TP41
RV003
B-Y DEM LEVEL
TP42
E B
Q416
IC311
8
1
RV004
R-Y DEM LEVEL
C313
E Q333
E
B
Q330 B
RV006
MATRIX B-Y
RV502
H. CENT
RV007
MATRIX R-Y
IC301
1
24
12
13
IC302
13
1
RV002
ACC
A-15
10
1
RV005
RV514
V. BLK
RV501
H. FREQ
IC503
1
VR1
VR2
9
12
11
22
1
IC501
RV505
PIN AMP
RV506
V. SIZE
RV509
BOW
RV503
H. SIZE
RV508
V. LIN
RV507
V. CENT
RV510
U.H. SIZE
RV513
H. BLK
RV512
VIDEO PHASE
RV550
V. ANG
RV504
PIN PHASE
RV511
U.V. SIZE

HORIZONTAL OSCILLATION FREQUENCY ADJUSTMENT (RV501)

1. Receive a monoscope signal.
2. Connect pin ① of IC501 to ground with 100 μF/16 V electrolytic capacitor.
3. Adjust RV501 so that the screen streaming stops.

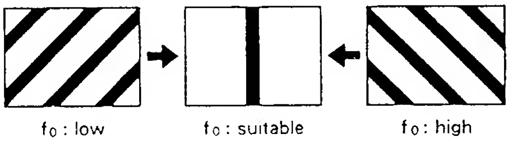
f0 : low
f0 : suitable
f0 : high

H-V BLK ADJUSTMENTS (RV510, RV512, RV513, RV514)

1. Receive a monoscope signal.
2. Set U/S (Under Scan) switch to Under mode.
3. • CONTRAST ········ Minimum
   • BRIGHTNESS ······ Maximum
4. Adjust RV510 (U. H. SIZE) so that the white frame of monoscope signal becomes visible.
5. Adjust RV512 (Video Phase) so that the white frame of monoscope signal becomes to the right side just on the screen.

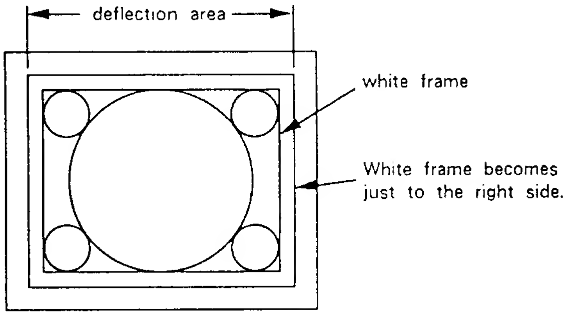
deflection area
white frame
White frame becomes just to the right side.

6. V. BLK Adjustment (RV514)

(1) Adjust RV514 (V. BLK) so that the upper side white frame of monoscope signal is not blanked.

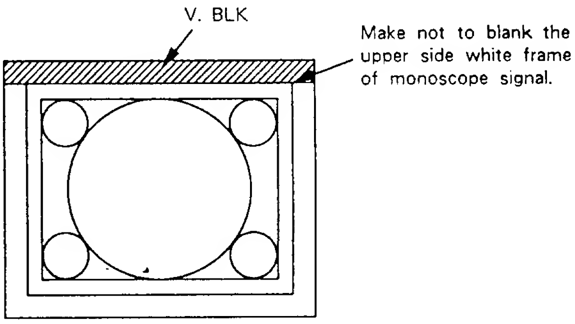
V. BLK
Make not to blank the upper side white frame of monoscope signal.

For Service Manuals
MAURITRON SERVICES
8 Cherry Tree Road, Chinnor
Oxfordshire, OX9 4QY.
Tel (01844) 351694
Fax (01844) 352554
email:- mauritron@dial.pipex.com

7. H. BLK Adjustment (RV513)

(1) Adjust with RV513 (H. BLK) so that the vertical line of the white frame of monoscope signal is blanked as following figure.

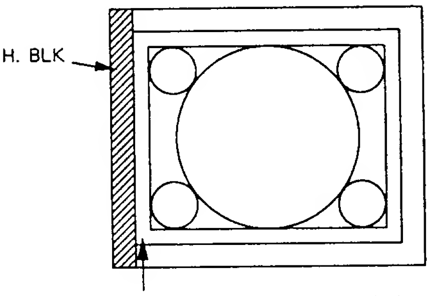

Make to blank the vertical line of the white frame of monoscope signal.

8. Screen Phase Adjustment (RV512)

(1) Adjust RV512 (Video Phase) so as to equalize the width of the white frame of monoscope signal on both sides of screen right and left.

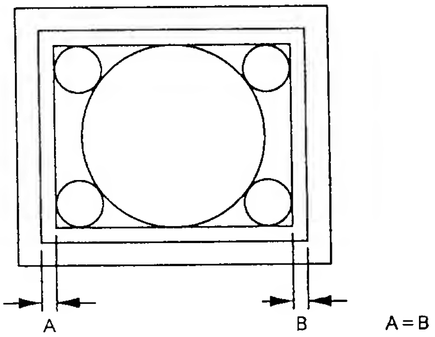

VERTICAL DEFLECTION PART ADJUSTMENTS (RV506, RV507, RV508, RV511)

1. Receive a monoscope signal.
2. - CONTRAST ········· 70%
   - BRIGHTNESS ······ 50%
3. Adjust RV506 (V. SIZE) so that the vertical size of monoscope signal becomes 12 frames.

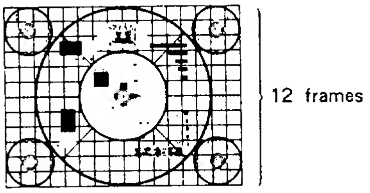

4. Adjust RV508 (V. LIN) the vertical linearity.

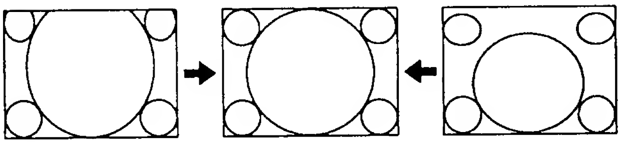

5. Adjust RV507 (V. CENT) the vertical position.

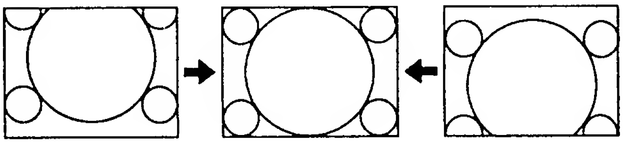

6. Adjust RV506 (V. SIZE) so that the vertical size of monoscope signal becomes 11.75 ±0.2 frames.
7. Set U/S (Under Scan) switch to Under mode.
8. Adjust with RV511 (U.V. SIZE) as follows.

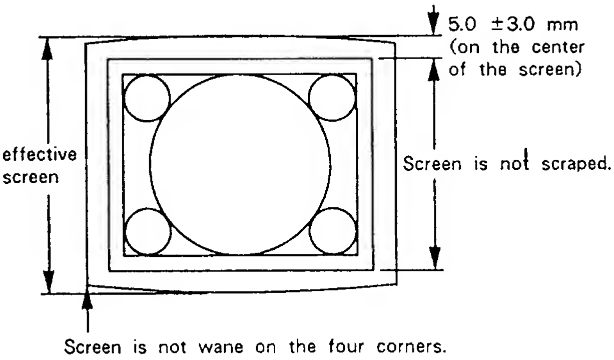

HORIZONTAL DEFLECTION PART ADJUSTMENTS (RV502, RV503, RV504, RV505, RV509, RV510, RV550)

1. Receive a monoscope signal.
2. - CONTRAST ········· 70%
   - BRIGHTNESS ······ 50%
3. H. CENT Adjustment (RV502)

(1) Adjust RV502 (H. CENT) the horizontal position.

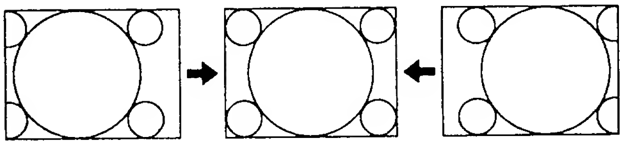

4. H. SIZE Adjustment (RV503)

(1) Adjust RV503 (H. SIZE) the horizontal size.

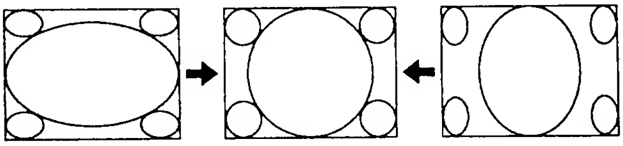

5. PIN AMP, PIN PHASE, V. ANG, BOW Adjustments (RV505, RV504, RV509, RV550)
   - PIN AMP (RV505)

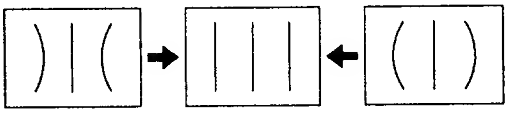

- PIN PHASE (RV504)

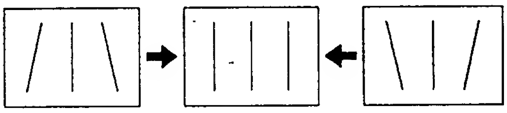

- V. ANG (RV550)

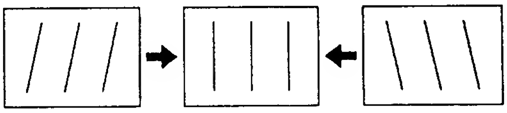

- BOW (RV509)

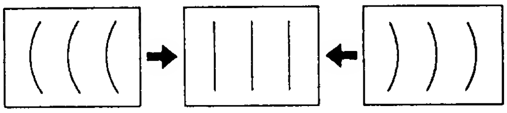

6. Adjust RV503 (H. SIZE) so that the horizontal size becomes 15.75 ±0.2 frames.
7. Set U/S (Under Scan) switch to Under mode.
8. Adjust RV510 (U.H. SIZE) the Under H. SIZE as follows.

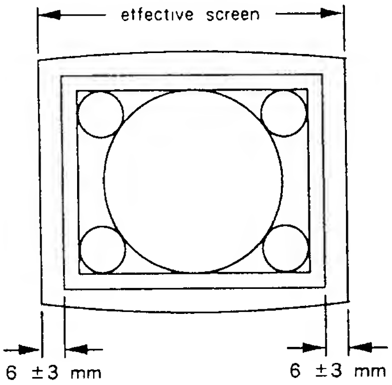

H-V DELAY ADJUSTMENT (VR1, VR2)

1. Receive a monoscope signal.
2. • CONTRAST ········· 70%
   • BRIGHTNESS ······ 50%
3. Set H-V DELAY switch to DELAY mode.
4. H. DELAY Adjustment (VR1)
(1) Connect an oscilloscope to pin ② (SYNC SEP) and pin ⑨ (H. SYNC) of IC503.
(2) Adjust VR1 of IC503 to become 41 ±1 μsec as follows.

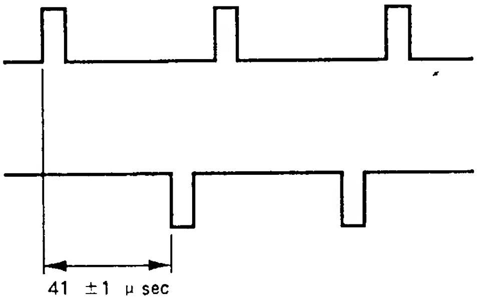

5. V. DELAY Adjustment (VR2)
(1) Connect an oscilloscope to pin ⑥ of IC503.
(2) Adjust VR2 of IC503 to become 8.1 ±1.0 msec as follows.

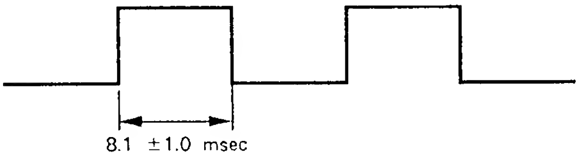

ACC ADJUSTMENT (RV002)

1. Receive a color-bar signal (EIA color-bar).
2. Connect an oscilloscope to the IC302 side lead of C313.
3. Adjust RV002 so that the burst signal level becomes 100 ±5 mVp-p.

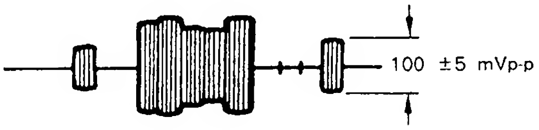

B-Y DEM LEVEL ADJUSTMENT (RV003)

1. Receive a color-bar signal (EIA 75% chroma color-bar).
2. Connect an oscilloscope to TP42 (B-Y).
3. Adjust RV003 so that the B-Y waveform becomes 0.75 Vp-p.

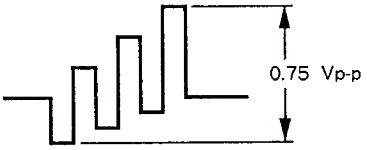

R-Y DEM LEVEL ADJUSTMENT (RV004)

1. Receive a color-bar signal (EIA 75% chroma color-bar).
2. Connect an oscilloscope to TP41 (R-Y).
3. Adjust RV004 so that the R-Y waveform becomes 0.75 Vp-p.

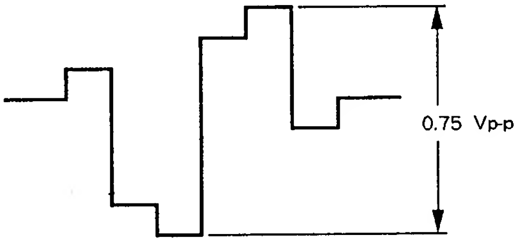

MATRIX ADJUSTMENT (RV006, RV007)

1. Receive a color-bar signal.
   (white peak : 75%
   black level : 0%
   chroma max. : 75%
   chroma min. : 0%)
2. CONTRAST ············ 70%
3. Connect an oscilloscope to pin ⑤ (B OUT) of A-15.
4. Adjust RV006 (B-Y) so that the BLUE OUT waveform becomes flat as following figure.

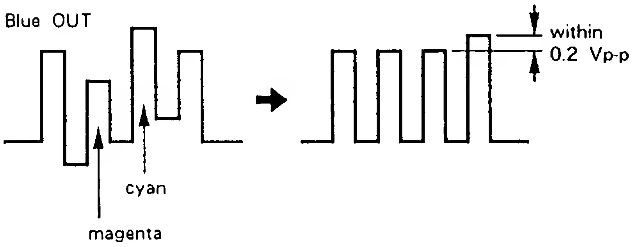

5. When there is difference between cyan portion and magenta portion, adjust with RV006 while tracking with PHASE volume for user control.
6. Connect an oscilloscope to pin ③ (R-Y) of A-15.
7. Adjust RV007 (R-Y) so that the RED OUT waveform becomes flat as following figure.

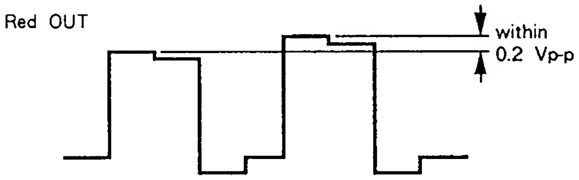

5-2. XA BOARD ADJUSTMENT

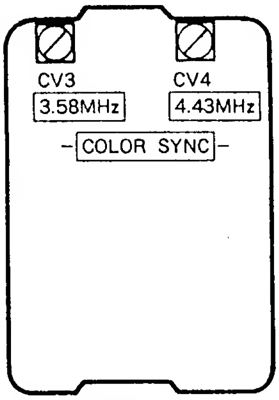

–XA BOARD
(COMPONENT SIDE) –

COLOR SYNCHRONIZATION (CW) ADJUSTMENT (CV3, CV4)

1. Short-circuit pins ⑨ and ⑩ of IC301 on A board.
2. Connect pin ③ of IC311 on A board to +12 V line via 4.7 kΩ resistor.
3. Short-circuit base and emitter of Q416 on A board.
4. 3.58 MHz Adjustment (CV3)

(1) Receive a color-bar signal (EIA color-bar).
(2) Adjust CV3 the color synchronization.

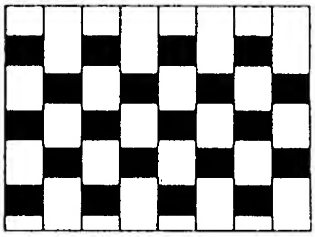

Adjust so that color stripes disappear and the hue change is stabilized extremery.

5. 4.43 MHz Adjustment (CV4)

(1) Receive a color-bar signal (EBU color-bar).
(2) Adjust CV4 the color synchronization.

6. Remove the short-circuit positions pins ⑨ and ⑩ of IC301 and base and emitter of Q416.

CAUTION : **This adjustment (XA board adjustment) should be made earlier than all adjustments of color.**

5-3. BA BOARD ADJUSTMENTS

—BA BOARD (COMPONENT SIDE)—

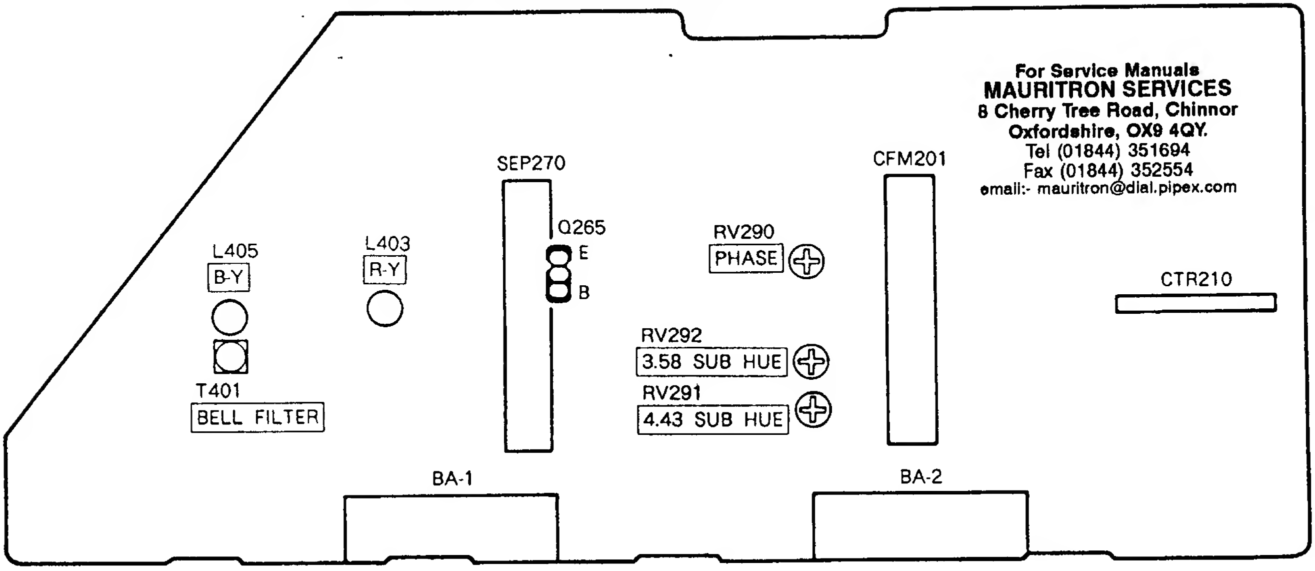
SEP270
CFM201
Q265
E
B
RV290
PHASE
L405
B-Y
L403
R-Y
CTR210
RV292
3.58 SUB HUE
RV291
4.43 SUB HUE
T401
BELL FILTER
BA-1
BA-2

For Service Manuals
MAURITRON SERVICES
8 Cherry Tree Road, Chinnor
Oxfordshire, OX9 4QY.
Tel (01844) 351694
Fax (01844) 352554
email:- mauritron@dial.pipex.com

NTSC 3.58 MHz ADJUSTMENT (RV292)

1. Receive NTSC 3.58 color-bar signal.
2. Connect an oscilloscope to pin ⑮ (COMPOSITE IN) of BA-2 connector.
3. Confirm the Y-OUT is 0.87 ±0.5 Vp-p.
4. Confirm the residual chroma is 35 mVp-p below. When it is above 35 mVp-p, adjust with RV1 and T1 inside CFM201 while tracking.

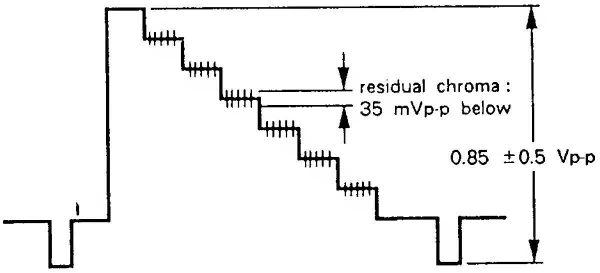
residual chroma :
35 mVp-p below
0.85 ±0.5 Vp-p

5. Connect an oscilloscope to pin ⑤ (B-OUT) of A-15 connector.
6. Adjust RV292 (3.58 SUB HUE) so that the BLUE OUT waveform level becomes flat as following figure.

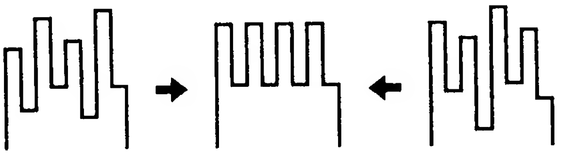

Note : CONTRAST······normal condition
HUE······Normal condition

NTSC 4.43 MHz ADJUSTMENT (RV291)

1. Receive NTSC 4.43 color-bar signal.
2. Confirm the voltage on pin ④ of CTR210 is above 5.0 V DC, and on pin ⑤ of CTR210 is below 0.1 V DC.
3. Connect an oscilloscope to pin ⑤ of A-15 connector.
4. Adjust RV291 (4.43 SUB HUE) so that the BLUE OUT waveform level becomes flat as following figure.

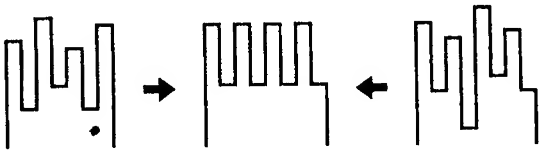

Note : CONTRAST······Normal condition
HUE······Normal condition

PAL ADJUSTMENTS (RV290)

1. Receive NTSC 4.43 color-bar signal.
2. Confirm the voltage on pin ④ of CTR210 is above 5.0 V DC, and on pin ⑤ of CTR210 is below 1.0 V DC.
3. Connect an oscilloscope to pin ⑪ of BA-2 connector.
4. Confirm the Y-OUT is 0.90 ±0.05 Vp-p and the residual chroma is below 30 mVp-p.

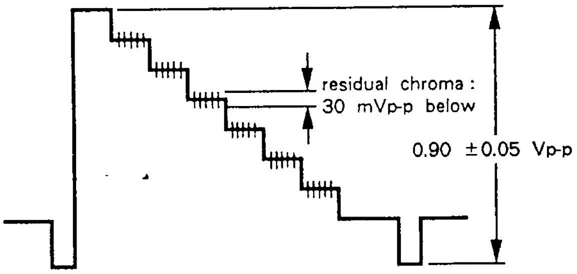
residual chroma :
30 mVp-p below
0.90 ±0.05 Vp-p

5. ANTI-PAL Adjustment (RV290)

(1) Receive the special PAL color-bar.

(2) Connect an oscilloscope to emitter of Q333 on A board, and adjust RV290 (PHASE) so that R-Y anti-PAL portion becomes flat as following figure.

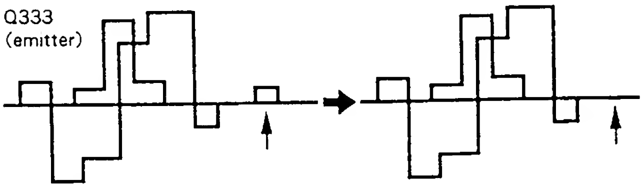

(3) Connect an oscilloscope to emitter of Q330 on A board, and adjust RV2 inside SEP270 so that B-Y anti-PAL portion becomes flat as following figure.

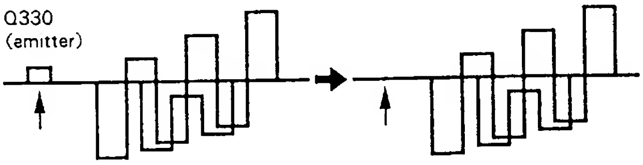

SECAM ADJUSTMENTS (T401, L403, L405)

1. Receive SECAM color-bar.

2. Bell Filter Adjustment (T401)

(1) Connect an oscilloscope to emitter of Q265.

(2) Adjust T401 (Bell Filter) so that the chroma waveform becomes smooth.

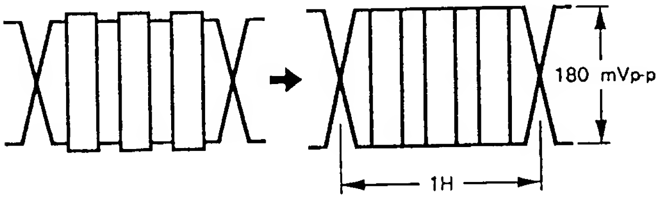

3. Color Balance Adjustment (L403)

(1) Connect an oscilloscope to pin ⑦ (R-Y) of BA-1 connector.

(2) Adjust L403 (R-Y) so that the non-colored portion level becomes flat.

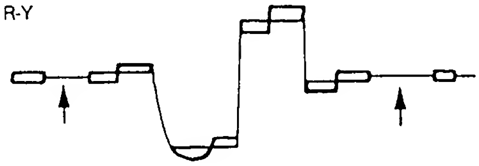

(3) Connect an oscilloscope to pin ⑧ (B-Y) of BA-1 connector.

(4) Adjust L405 (B-Y) so that the non-colored portion level becomes flat.

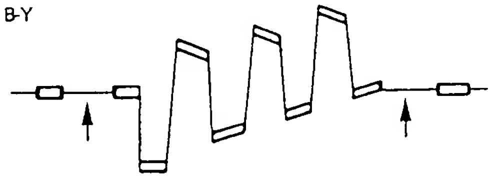

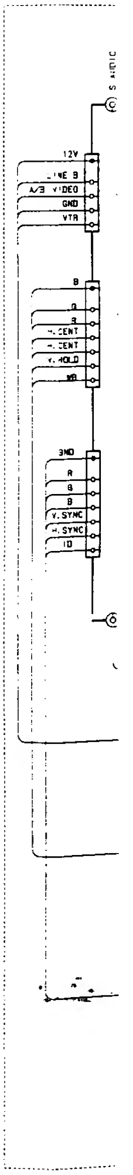
S AUDIO
12V
LINE B
A/B VIDEO
GND
VTR
B
G
R
H.CENT
V.CENT
V.HOLD
WB
GND
R
G
B
V.SYNC
H.SYNC
ID

6-1. FRAME SCHEMATIC DIAGRAM

For Service Manuals
MAURITRON SERVICES
8 Cherry Tree Road, Chinnor
Oxfordshire, OX9 4QY.
Tel (01844) 351694
Fax (01844) 352554
email:- mauritron@dial.pipex.com

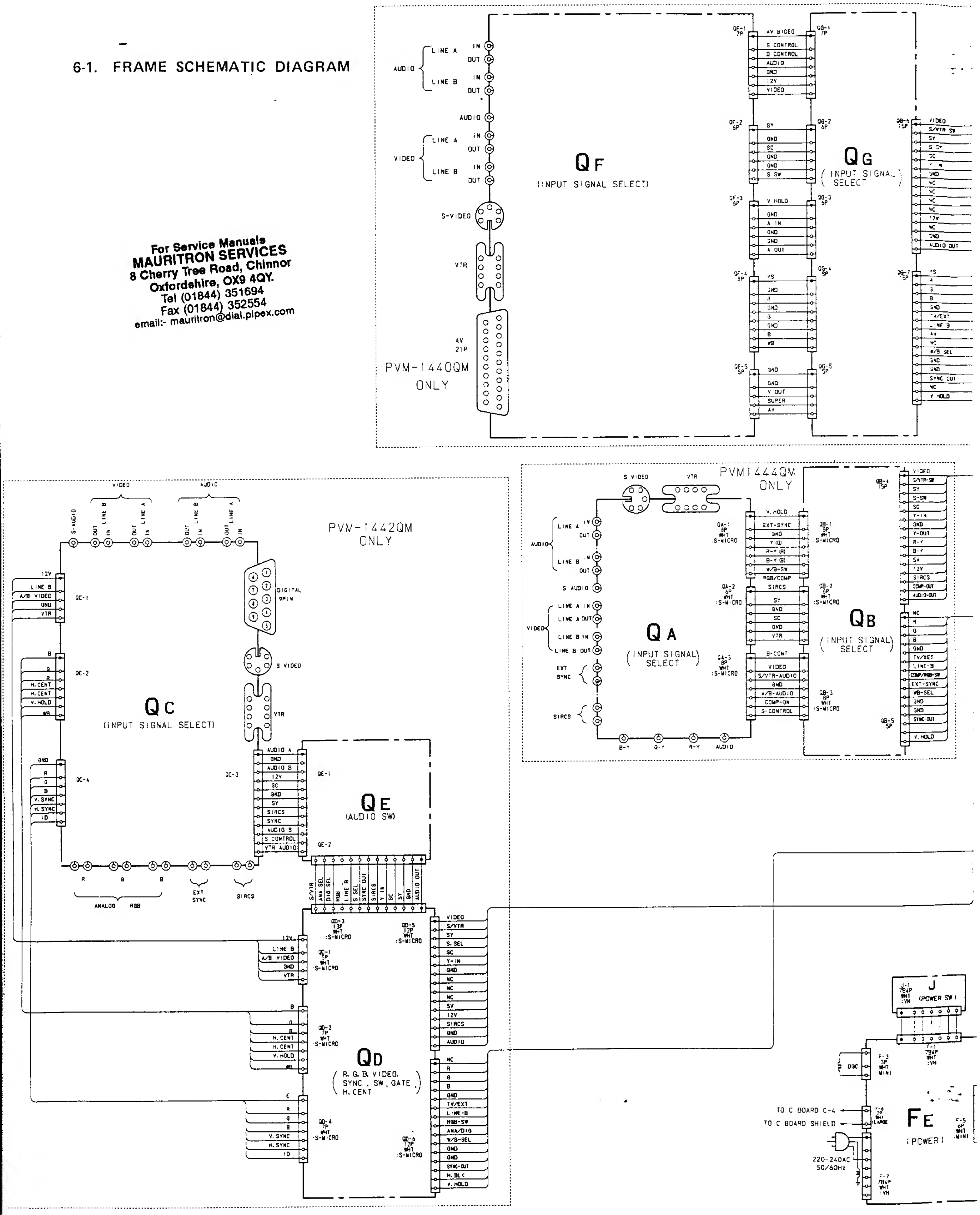
QF
(INPUT SIGNAL SELECT)
QG
(INPUT SIGNAL SELECT)
AUDIO
LINE A
LINE B
IN
OUT
VIDEO
S-VIDEO
VTR
AV 21P
PVM-1440QM ONLY
AV BIDEO
S CONTROL
B CONTROL
GND
12V
V HOLD
A IN
A OUT
YS
SUPER
QA
(INPUT SIGNAL SELECT)
QB
(INPUT SIGNAL SELECT)
PVM1444QM ONLY
S AUDIO
EXT SYNC
SIRCS
B-Y
G-Y
R-Y
EXT-SYNC
R-Y (R)
B-Y (B)
W/B-SW
RGB/COMP
S/VTR-AUDIO
A/B-AUDIO
COMP-ON
S-CONTROL
QC
(INPUT SIGNAL SELECT)
PVM-1442QM ONLY
DIGITAL 9PIN
ANALOG RGB
H. CENT
V. SYNC
H. SYNC
ID
QE
(AUDIO SW)
AUDIO A
AUDIO B
SC
SY
SYNC
VTR AUDIO
QD
(R. G. B. VIDEO, SYNC, SW, GATE H. CENT)
S/VTR
S. SEL
Y-IN
NC
5V
TV/EXT
LINE-B
RGB-SW
ANA/DIG
W/B-SEL
SYNC-OUT
H. BLK
J
(POWER SW)
DGC
TO C BOARD C-4
TO C BOARD SHIELD
220-240AC 50/60Hz
FE
(POWER)

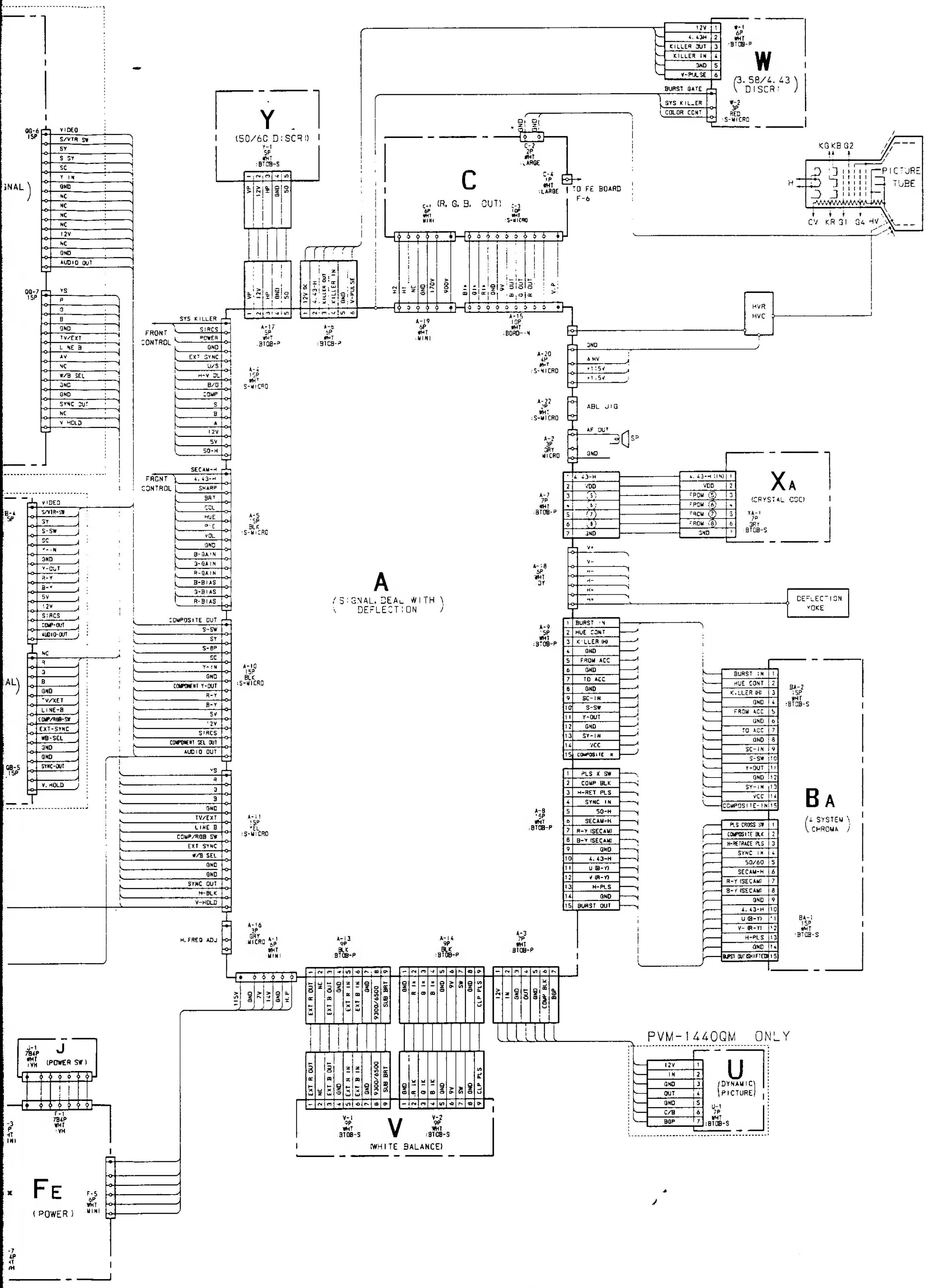
W
(3.58/4.43 DISCRI)
W-1 6P WHT :BTOB-P
12V
4.43H
KILLER OUT
KILLER IN
GND
V-PULSE
BURST GATE
SYS KILLER
COLOR CONT
W-2 3P RED :S-MICRO
Y
(50/60 DISCRI)
Y-1 5P WHT :BTOB-S
VP
12V
HP
GND
50
C
(R, G, B, OUT)
C-1 6P WHT MINI
C-3 10P WHT :S-MICRO
C-2 2P WHT :LARGE
C-4 1P WHT :LARGE
TO FE BOARD F-6
PICTURE TUBE
KG KB G2
H
CV KR G1 G4 HV
HVR
HVC
A
(SIGNAL DEAL WITH DEFLECTION)
A-17 5P WHT :BTOB-P
A-6 5P WHT :BTOB-P
A-19 6P WHT MINI
A-15 10P WHT :BORD-IN
A-20 4P WHT :S-MICRO
A-22 2P WHT :S-MICRO
A-2 3P GRY MICRO
A-7 7P WHT BTOB-P
A-18 5P WHT DY
A-9 15P WHT :BTOB-P
A-8 15P WHT :BTOB-P
A-4 15P WHT S-MICRO
A-5 15P BLK :S-MICRO
A-10 15P BLK :S-MICRO
A-11 15P YEL :S-MICRO
A-16 3P GRY MICRO
A-1 6P WHT MINI
A-13 9P BLK :BTOB-P
A-14 9P BLK :BTOB-P
A-3 7P WHT BTOB-P
FRONT CONTROL
SYS KILLER
SIRCS
POWER
GND
EXT SYNC
U/S
H-V DL
B/D
COMP
12V
5V
50-H
SECAM-H
4.43-H
SHARP
BRT
COL
HUE
PIC
VOL
B-GAIN
G-GAIN
R-GAIN
B-BIAS
G-BIAS
R-BIAS
COMPOSITE OUT
S-SW
SY
S-BP
SC
Y-IN
COMPONENT Y-OUT
R-Y
B-Y
COMPONENT SEL OUT
AUDIO OUT
YS
TV/EXT
LINE B
COMP/RGB SW
W/B SEL
SYNC OUT
H-BLK
V-HOLD
H. FREQ ADJ
ABL JIG
AF OUT
SP
GND
A HV
+115V
+11.5V
XA
(CRYSTAL OSC)
XA-1 7P GRY BTOB-S
4.43-H (IN)
VDD
FROM ⑤
FROM ⑥
FROM ⑦
FROM ⑧
DEFLECTION YOKE
V+
V-
H-
H+
BA
(4 SYSTEM CHROMA)
BA-2 15P WHT :BTOB-S
BA-1 15P WHT :BTOB-S
BURST IN
HUE CONT
KILLER (H)
FROM ACC
TO ACC
SC-IN
Y-OUT
SY-IN
VCC
COMPOSITE-IN
PLS CROSS SW
COMPOSITE BLK
H-RETRACE PLS
SYNC IN
50/60
SECAM-H
R-Y (SECAM)
B-Y (SECAM)
4.43-H
U (B-Y)
V (R-Y)
H-PLS
BURST OUT(SHIFTED)
QG-6 15P
QG-7 15P
QB-4 15P
QB-5 15P
VIDEO
S/VTR SW
S SY
Y IN
NC
AUDIO OUT
AV
LINE B
COMP/RGB-SW
EXT-SYNC
WB-SEL
SYNC-OUT
V. HOLD
SIGNAL
J
(POWER SW)
J-1 7B4P WHT :VH
F-1 7B4P WHT :VH
FE
(POWER)
F-5 6P WHT MINI
115V
7V
14V
H.P
EXT R OUT
EXT B OUT
EXT R IN
EXT B IN
9300/6500
SUB BRT
CLP PLS
COMP BLK
BGP
V
(WHITE BALANCE)
V-1 9P WHT BTOB-S
V-2 9P WHT :BTOB-S
PVM-1440QM ONLY
U
(DYNAMIC PICTURE)
U-1 7P WHT :BTOB-S
12V
IN
OUT
C/B
BGP

6-2. BLOCK DIAGRAMS

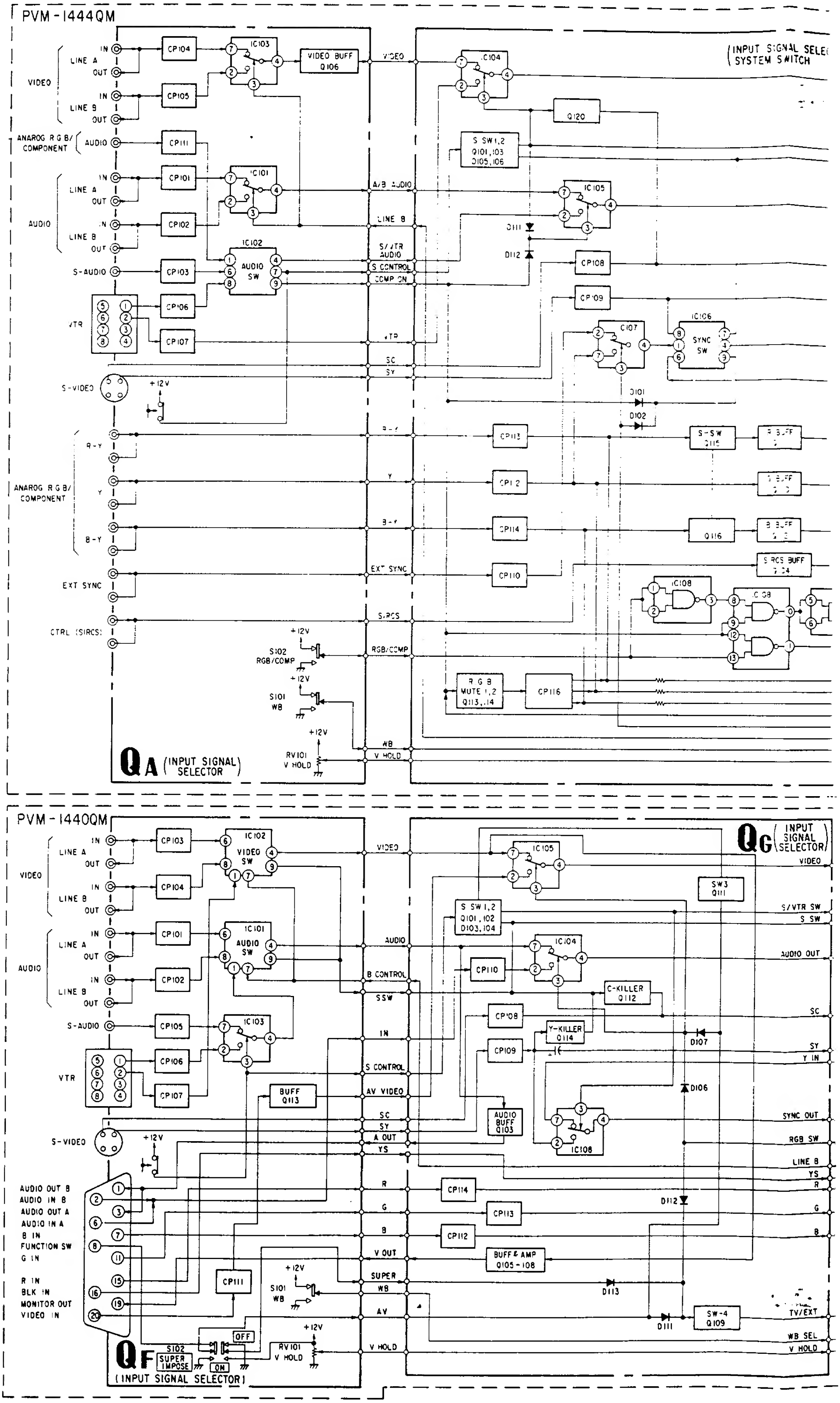
PVM-1444QM
VIDEO
LINE A
IN
OUT
LINE B
ANAROG R G B/ COMPONENT
AUDIO
S-AUDIO
VTR
S-VIDEO
R-Y
Y
B-Y
EXT SYNC
CTRL (SIRCS)
CP104
CP105
CP111
CP101
CP102
CP103
CP106
CP107
IC103
IC101
IC102
AUDIO SW
VIDEO BUFF Q106
VIDEO
A/B AUDIO
LINE B
S/VTR AUDIO
S CONTROL
COMP ON
VTR
SC
SY
+12V
S102 RGB/COMP
S101 WB
RV101 V HOLD
RGB/COMP
SIRCS
WB
V HOLD
QA (INPUT SIGNAL SELECTOR)
IC104
Q120
S SW1,2 Q101,103 Q105,106
IC105
D111
D112
CP108
CP109
IC107
IC106
SYNC SW
D101
D102
CP113
CP112
CP114
CP110
S-SW Q115
Q116
R BUFF
G BUFF
B BUFF
S RCS BUFF
IC108
R G B MUTE 1,2 Q113,114
CP116
INPUT SIGNAL SELECT SYSTEM SWITCH
PVM-1440QM
VIDEO SW
AUDIO SW
BUFF Q113
AUDIO OUT B
AUDIO IN B
AUDIO OUT A
AUDIO IN A
B IN
FUNCTION SW
G IN
R IN
BLK IN
MONITOR OUT
VIDEO IN
S102 SUPER IMPOSE
OFF
ON
QF (INPUT SIGNAL SELECTOR)
AUDIO
B CONTROL
SSW
IN
AV VIDEO
A OUT
YS
R
G
B
V OUT
SUPER
AV
QG (INPUT SIGNAL SELECTOR)
S SW1,2 Q101,102 D103,104
SW3 Q111
C-KILLER Q112
Y-KILLER Q114
D107
D106
AUDIO BUFF Q103
D112
BUFF & AMP Q105-108
D113
D111
SW-4 Q109
S/VTR SW
S SW
AUDIO OUT
SYNC OUT
RGB SW
LINE B
Y IN
TV/EXT
WB SEL
V HOLD

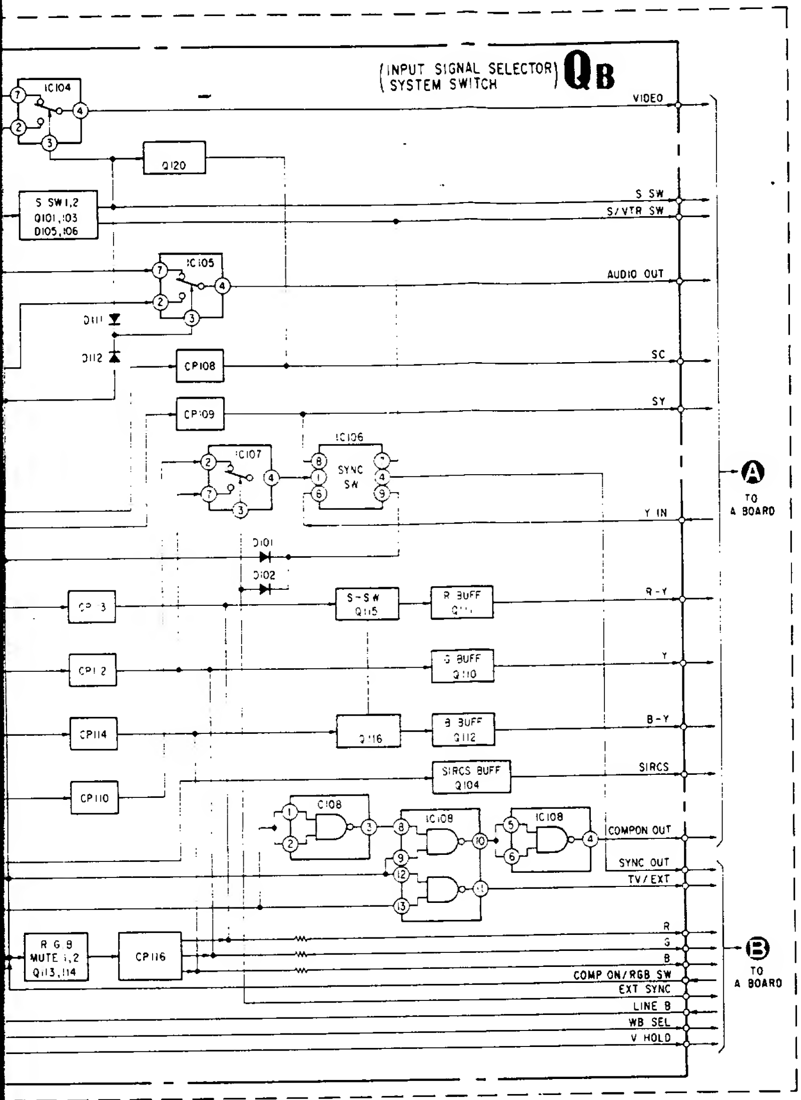
QB
INPUT SIGNAL SELECTOR
SYSTEM SWITCH
IC104
Q120
S SW 1,2
Q101,103
D105,106
IC105
D111
D112
CP108
CP109
IC107
IC106
SYNC SW
D101
D102
CP113
S-SW Q115
R BUFF Q111
CP112
G BUFF Q110
CP114
Q116
B BUFF Q112
SIRCS BUFF Q104
CP110
IC108
R G B MUTE 1,2 Q113,114
CP116
VIDEO
S SW
S/VTR SW
AUDIO OUT
SC
SY
Y IN
R-Y
Y
B-Y
SIRCS
COMPON OUT
SYNC OUT
TV/EXT
R
G
B
COMP ON/RGB SW
EXT SYNC
LINE B
WB SEL
V HOLD
A
TO A BOARD
B
TO A BOARD

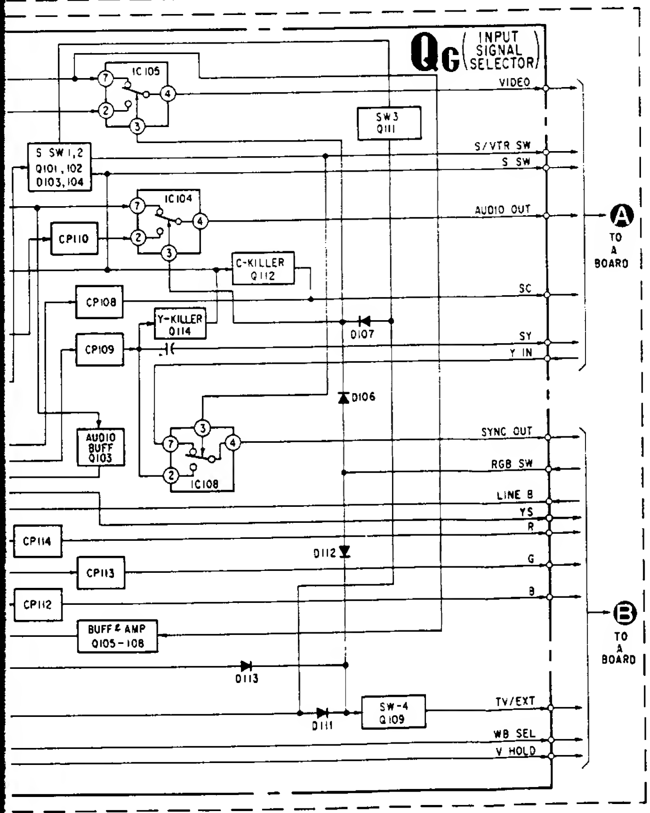
QG
INPUT SIGNAL SELECTOR
IC105
SW3 Q111
S SW 1,2
Q101,102
D103,104
IC104
CP110
C-KILLER Q112
CP108
Y-KILLER Q114
D107
CP109
D106
AUDIO BUFF Q103
IC108
CP114
D112
CP113
CP112
BUFF & AMP Q105-108
D113
D111
SW-4 Q109
VIDEO
S/VTR SW
S SW
AUDIO OUT
SC
SY
Y IN
SYNC OUT
RGB SW
LINE B
YS
R
G
B
TV/EXT
WB SEL
V HOLD
A
TO A BOARD
B
TO A BOARD

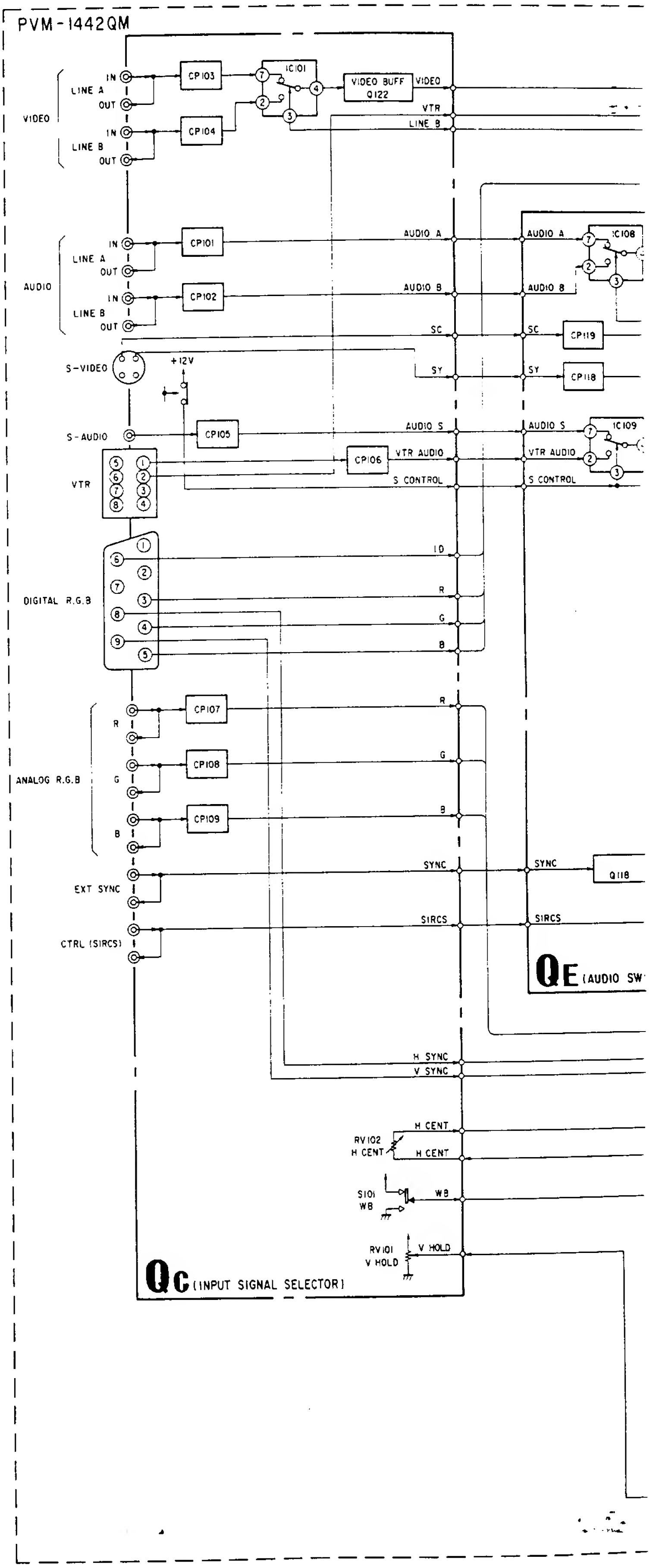
PVM-1442QM
VIDEO
LINE A
LINE B
IN
OUT
CP103
CP104
IC101
VIDEO BUFF Q122
VIDEO
VTR
LINE B
AUDIO
CP101
CP102
AUDIO A
AUDIO B
SC
SY
S-VIDEO
+12V
S-AUDIO
CP105
AUDIO S
VTR
CP106
VTR AUDIO
S CONTROL
DIGITAL R.G.B
ID
R
G
B
ANALOG R.G.B
CP107
CP108
CP109
EXT SYNC
SYNC
CTRL (SIRCS)
SIRCS
H SYNC
V SYNC
H CENT
RV102 H CENT
S101 WB
WB
RV101 V HOLD
V HOLD
QC (INPUT SIGNAL SELECTOR)
IC108
CP119
CP118
IC109
Q118
QE (AUDIO SW

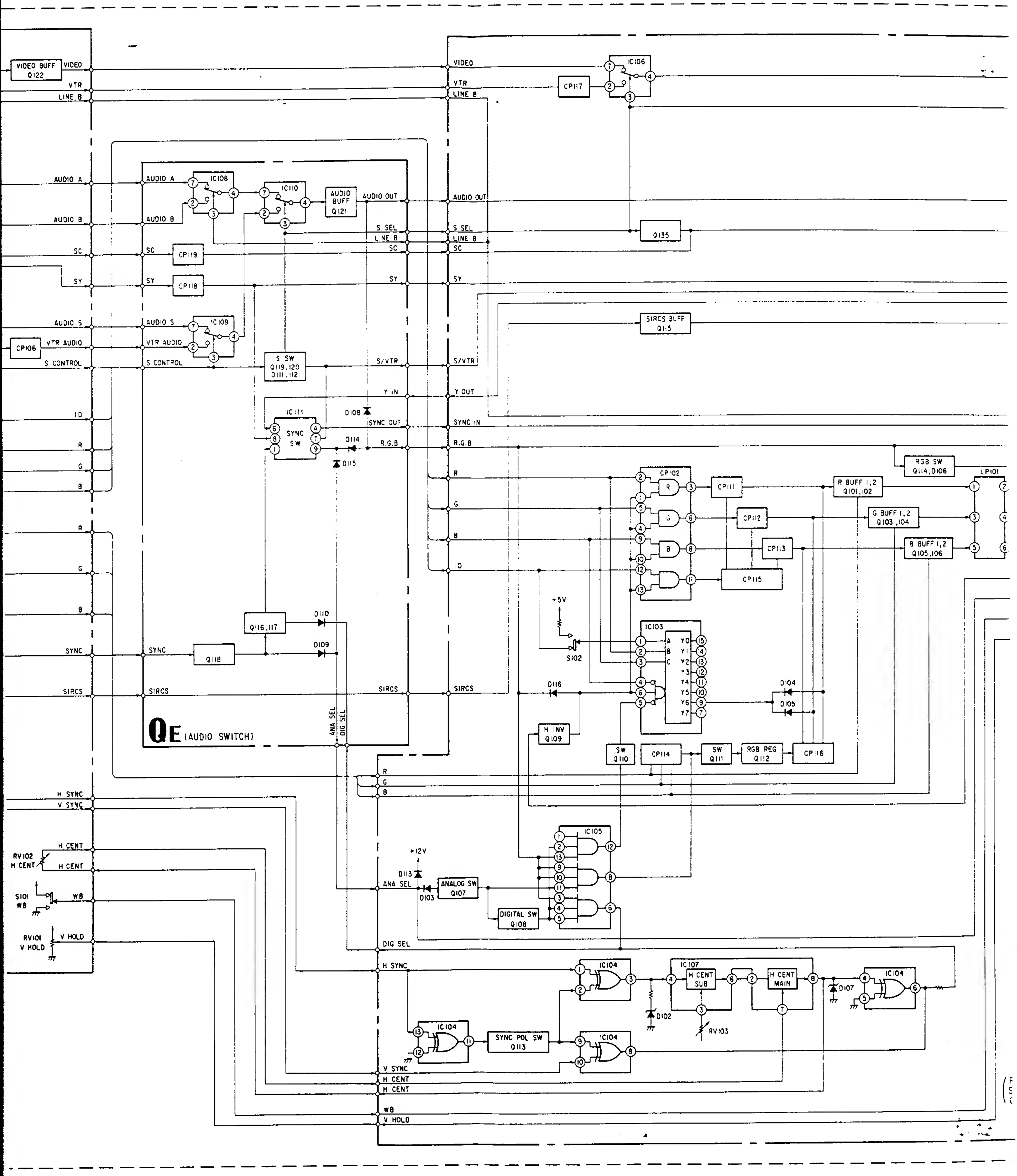
VIDEO BUFF Q122
VIDEO
VTR
LINE B
AUDIO A
AUDIO B
SC
SY
AUDIO S
CP106
VTR AUDIO
S CONTROL
ID
R
G
B
R
G
B
SYNC
SIRCS
H SYNC
V SYNC
H CENT
RV102 H CENT
H CENT
S101 WB
WB
RV101 V HOLD
V HOLD
AUDIO A
AUDIO B
IC108
IC110
AUDIO BUFF Q121
AUDIO OUT
S SEL
LINE B
SC
SC
CP119
SY
CP118
SY
AUDIO S
IC109
VTR AUDIO
S CONTROL
S SW Q119,120 D111,112
S/VTR
Y IN
D108
IC111
SYNC SW
SYNC OUT
D114
R.G.B
D115
Q116,117
D110
D109
SYNC
Q118
SIRCS
SIRCS
QE (AUDIO SWITCH)
ANA SEL
DIG SEL
VIDEO
VTR
LINE B
CP117
IC106
AUDIO OUT
S SEL
LINE B
SC
Q135
SY
SIRCS BUFF Q115
S/VTR
Y OUT
SYNC IN
R.G.B
RGB SW Q114,D106
LP101
R
CP102
CP111
R BUFF 1,2 Q101,102
G
CP112
G BUFF 1,2 Q103,104
B
CP113
B BUFF 1,2 Q105,106
ID
CP115
+5V
S102
IC103
A B C
Y0 Y1 Y2 Y3 Y4 Y5 Y6 Y7
D116
D104
D105
H INV Q109
SW Q110
CP114
SW Q111
RGB REG Q112
CP116
SIRCS
R
G
B
IC105
+12V
D113
ANA SEL
D103
ANALOG SW Q107
DIGITAL SW Q108
DIG SEL
H SYNC
IC104
IC107
H CENT SUB
H CENT MAIN
D107
IC104
D102
RV103
IC104
SYNC POL SW Q113
IC104
V SYNC
H CENT
H CENT
WB
V HOLD

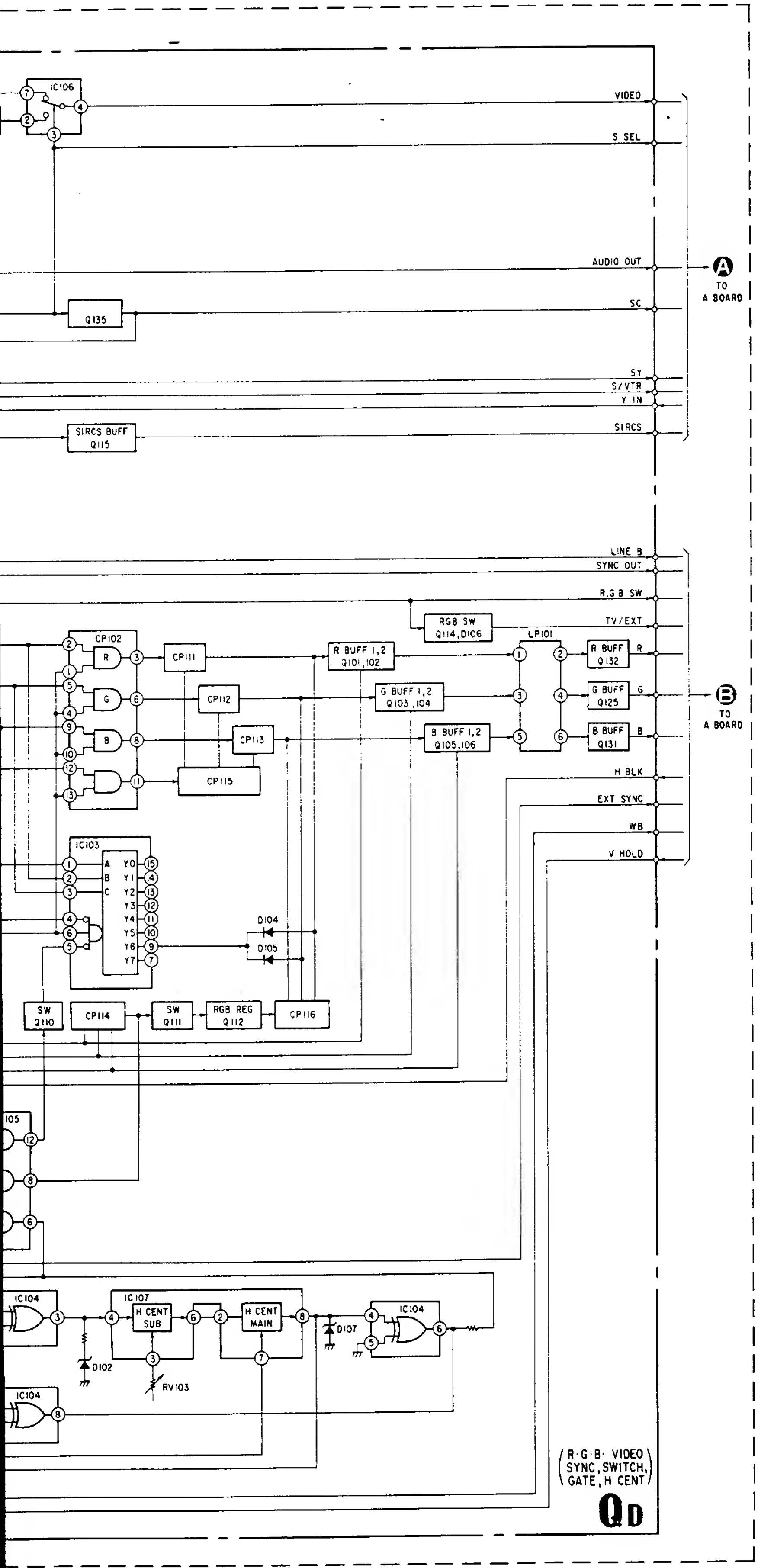
IC106
VIDEO
S SEL
AUDIO OUT
SC
Q135
A
TO A BOARD
SY
S/VTR
Y IN
SIRCS
SIRCS BUFF Q115
LINE B
SYNC OUT
R.G.B SW
TV/EXT
RGB SW Q114, D106
CP102
CP111
CP112
CP113
CP115
R BUFF 1,2 Q101,102
G BUFF 1,2 Q103,104
B BUFF 1,2 Q105,106
LP101
R BUFF Q132
G BUFF Q125
B BUFF Q131
B
TO A BOARD
H BLK
EXT SYNC
WB
V HOLD
IC103
D104
D105
SW Q110
CP114
SW Q111
RGB REG Q112
CP116
IC105
IC104
IC107
H CENT SUB
H CENT MAIN
D102
RV103
D107
R·G·B VIDEO SYNC, SWITCH, GATE, H CENT
QD

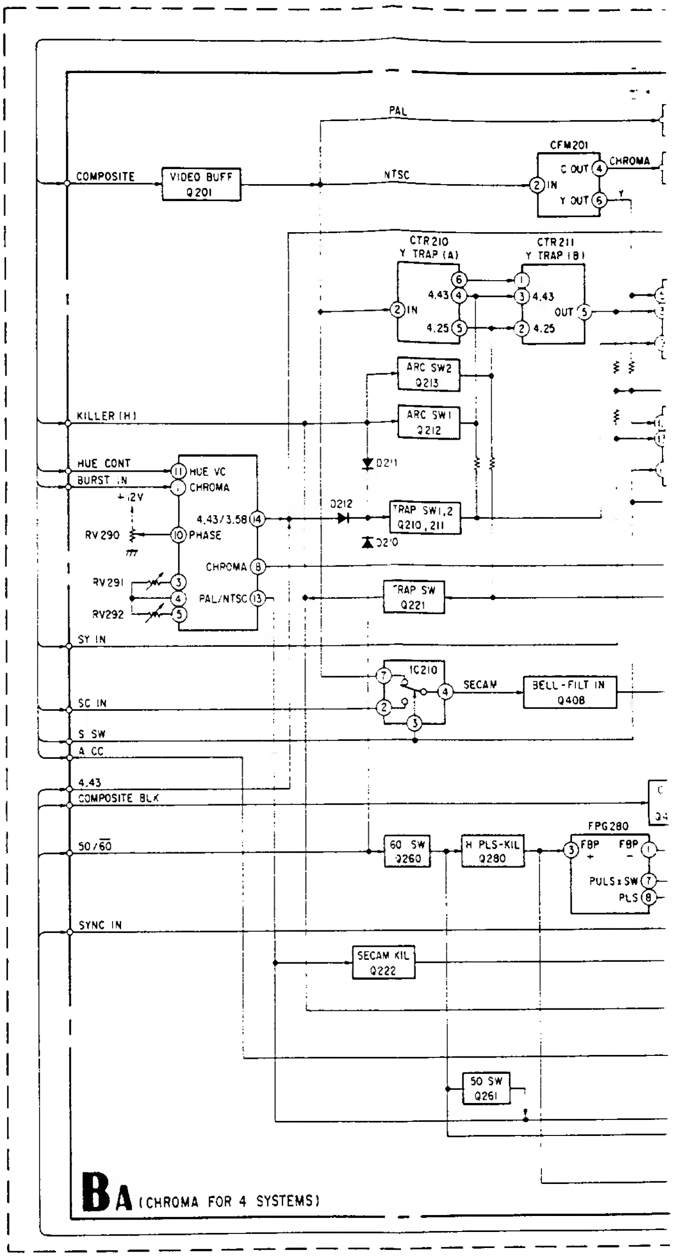
PAL
COMPOSITE
VIDEO BUFF Q201
NTSC
CFM201
C OUT
CHROMA
IN
Y OUT
CTR210 Y TRAP (A)
CTR211 Y TRAP (B)
4.43
4.25
IN
OUT
ARC SW2 Q213
ARC SW1 Q212
KILLER (H)
D211
HUE CONT
BURST IN
HUE VC
CHROMA
+12V
RV290
PHASE
4.43/3.58
D212
TRAP SW1,2 Q210,211
D210
RV291
RV292
PAL/NTSC
TRAP SW Q221
SY IN
IC210
SECAM
BELL-FILT IN Q408
SC IN
S SW
A CC
4.43
COMPOSITE BLK
50/60
60 SW Q260
H PLS-KIL Q280
FPG280
FBP
PULS SW
PLS
SYNC IN
SECAM KIL Q222
50 SW Q261
BA (CHROMA FOR 4 SYSTEMS)

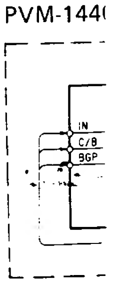
PVM-144
IN
C/B
BGP

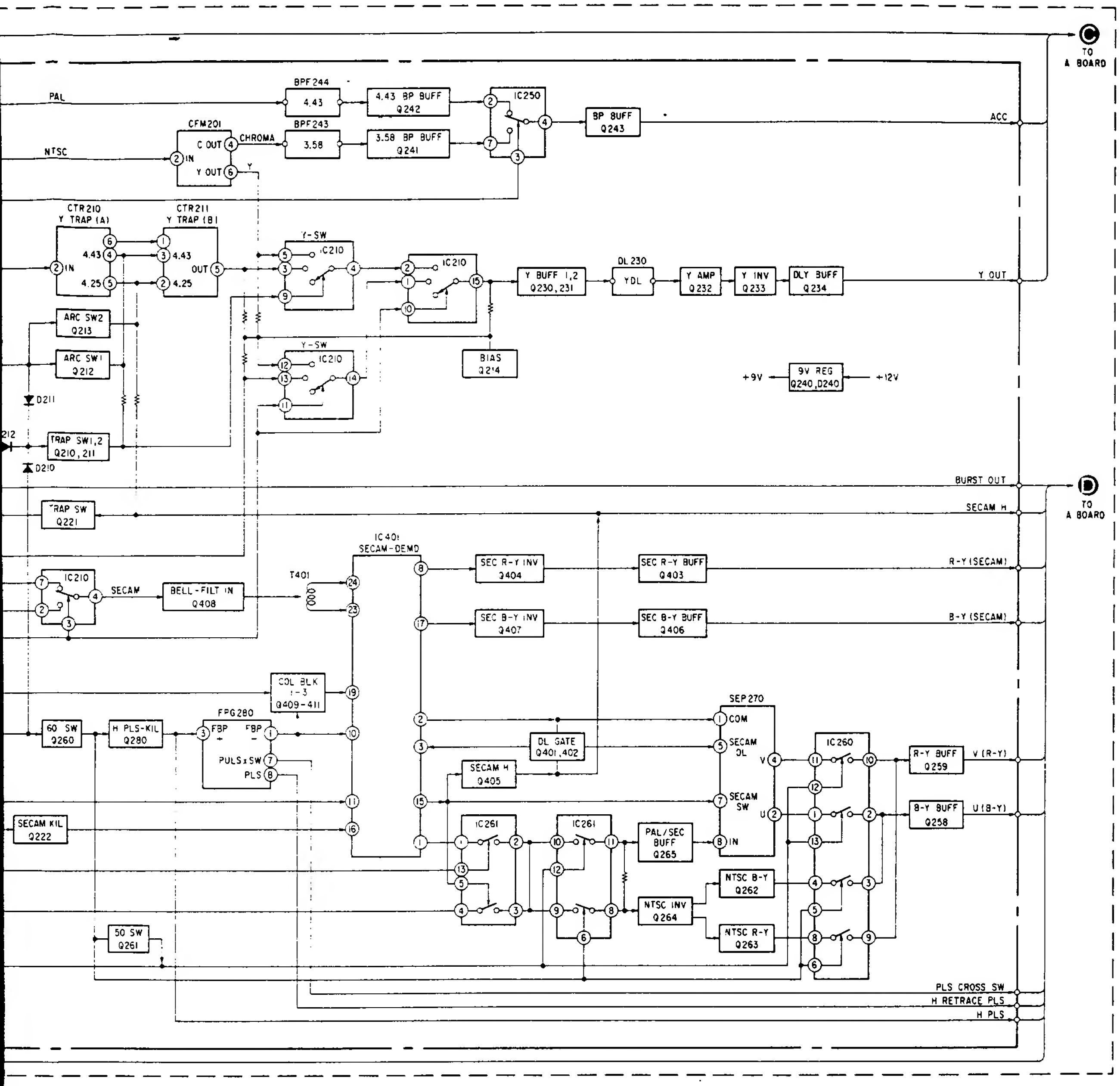
TO A BOARD
C
BPF244
4.43
4.43 BP BUFF Q242
IC250
BP BUFF Q243
ACC
PAL
CFM201
C OUT
CHROMA
BPF243
3.58
3.58 BP BUFF Q241
NTSC
IN
Y OUT
Y
CTR210 Y TRAP (A)
CTR211 Y TRAP (B)
4.43
4.25
IN
OUT
Y-SW
IC210
DL 230
YDL
Y BUFF 1,2 Q230,231
Y AMP Q232
Y INV Q233
DLY BUFF Q234
Y OUT
ARC SW2 Q213
ARC SW1 Q212
BIAS Q214
9V REG Q240,D240
+9V
+12V
D211
D212
TRAP SW1,2 Q210,211
D210
BURST OUT
D
TO A BOARD
TRAP SW Q221
SECAM H
IC401 SECAM-DEMD
T401
SECAM
BELL-FILT IN Q408
SEC R-Y INV Q404
SEC R-Y BUFF Q403
R-Y (SECAM)
SEC B-Y INV Q407
SEC B-Y BUFF Q406
B-Y (SECAM)
COL BLK 1-3 Q409-411
SEP270
COM
SECAM DL
SECAM SW
IN
V
U
60 SW Q260
H PLS-KIL Q280
FPG280
FBP
PULS SW
PLS
DL GATE Q401,402
SECAM H Q405
IC260
R-Y BUFF Q259
V (R-Y)
B-Y BUFF Q258
U (B-Y)
SECAM KIL Q222
IC261
PAL/SEC BUFF Q265
NTSC B-Y Q262
NTSC INV Q264
NTSC R-Y Q263
50 SW Q261
PLS CROSS SW
H RETRACE PLS
H PLS

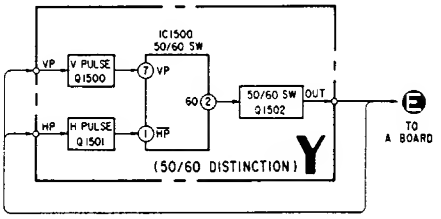
IC1500 50/60 SW
VP
V PULSE Q1500
HP
H PULSE Q1501
60
50/60 SW Q1502
OUT
E
TO A BOARD
(50/60 DISTINCTION)
Y

PVM-1440QM

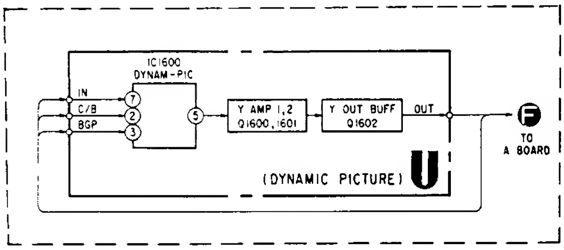
IC1600 DYNAM-PIC
IN
C/B
BGP
Y AMP 1,2 Q1600,1601
Y OUT BUFF Q1602
OUT
F
TO A BOARD
(DYNAMIC PICTURE)
U

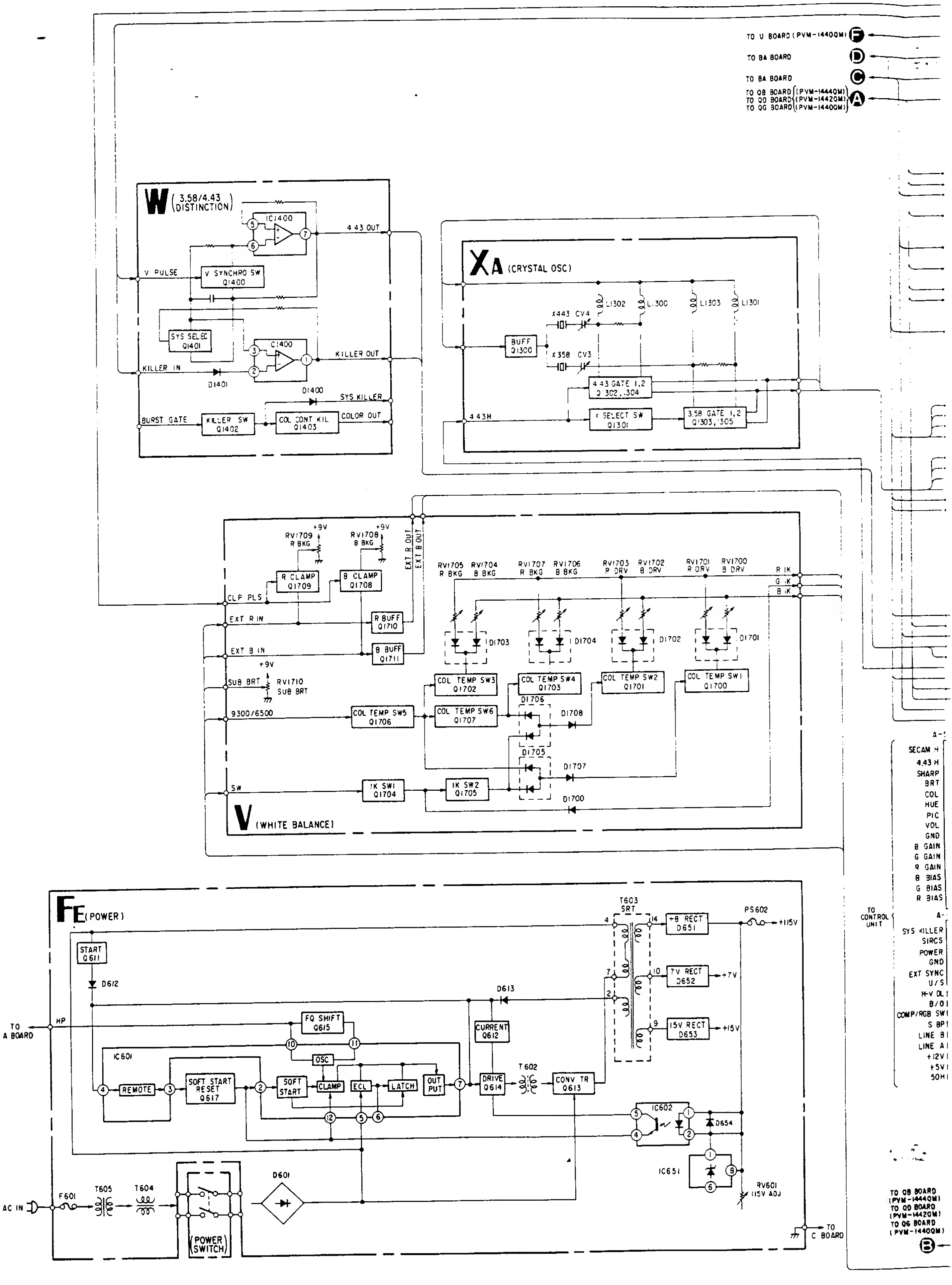
TO U BOARD (PVM-1440QM) F
TO BA BOARD D
TO BA BOARD C
TO QB BOARD (PVM-1444QM)
TO QD BOARD (PVM-1442QM)
TO QG BOARD (PVM-1440QM) A
W (3.58/4.43 DISTINCTION)
IC1400
4.43 OUT
V PULSE
V SYNCHRO SW Q1400
SYS SELEC Q1401
IC1400
KILLER OUT
KILLER IN
D1401
D1400
SYS KILLER
BURST GATE
KILLER SW Q1402
COL CONT KIL Q1403
COLOR OUT
XA (CRYSTAL OSC)
L1302
L1300
L1303
L1301
X443 CV4
BUFF Q1300
X358 CV3
4.43 GATE 1,2 Q1302,1304
4.43H
X SELECT SW Q1301
3.58 GATE 1,2 Q1303,1305
RV1709 R BKG
+9V
RV1708 B BKG
+9V
EXT R OUT
EXT B OUT
R CLAMP Q1709
B CLAMP Q1708
CLP PLS
EXT R IN
R BUFF Q1710
EXT B IN
B BUFF Q1711
+9V
SUB BRT
RV1710 SUB BRT
9300/6500
RV1705 R BKG
RV1704 B BKG
RV1707 R BKG
RV1706 B BKG
RV1703 R DRV
RV1702 B DRV
RV1701 R DRV
RV1700 B DRV
R IK
G IK
B IK
D1703
D1704
D1702
D1701
COL TEMP SW3 Q1702
COL TEMP SW4 Q1703
COL TEMP SW2 Q1701
COL TEMP SW1 Q1700
COL TEMP SW5 Q1706
COL TEMP SW6 Q1707
D1706
D1708
D1705
D1707
SW
IK SW1 Q1704
IK SW2 Q1705
D1700
V (WHITE BALANCE)
FE (POWER)
START Q611
D612
D613
T603 SRT
4
14
+B RECT D651
PS602
+115V
7
10
7V RECT D652
+7V
2
9
15V RECT D653
+15V
TO A BOARD
HP
FQ SHIFT Q615
CURRENT Q612
IC601
10
11
OSC
4
REMOTE
3
SOFT START RESET Q617
2
SOFT START
CLAMP
ECL
LATCH
OUT PUT
7
DRIVE Q614
T602
CONV TR Q613
12
5
6
IC602
5
1
D654
4
2
1
IC651
8
6
RV601 115V ADJ
AC IN
F601
T605
T604
D601
POWER SWITCH
TO C BOARD
A-
SECAM H
4.43 H
SHARP
BRT
COL
HUE
PIC
VOL
GND
B GAIN
G GAIN
R GAIN
B BIAS
G BIAS
R BIAS
TO CONTROL UNIT
A-
SYS KILLER
SIRCS
POWER
GND
EXT SYNC
U/S
H-V DL
B/O
COMP/RGB SW
S BP
LINE B
LINE A
+12V
+5V
50H
TO QB BOARD (PVM-1444QM)
TO QD BOARD (PVM-1442QM)
TO QG BOARD (PVM-1440QM)
B

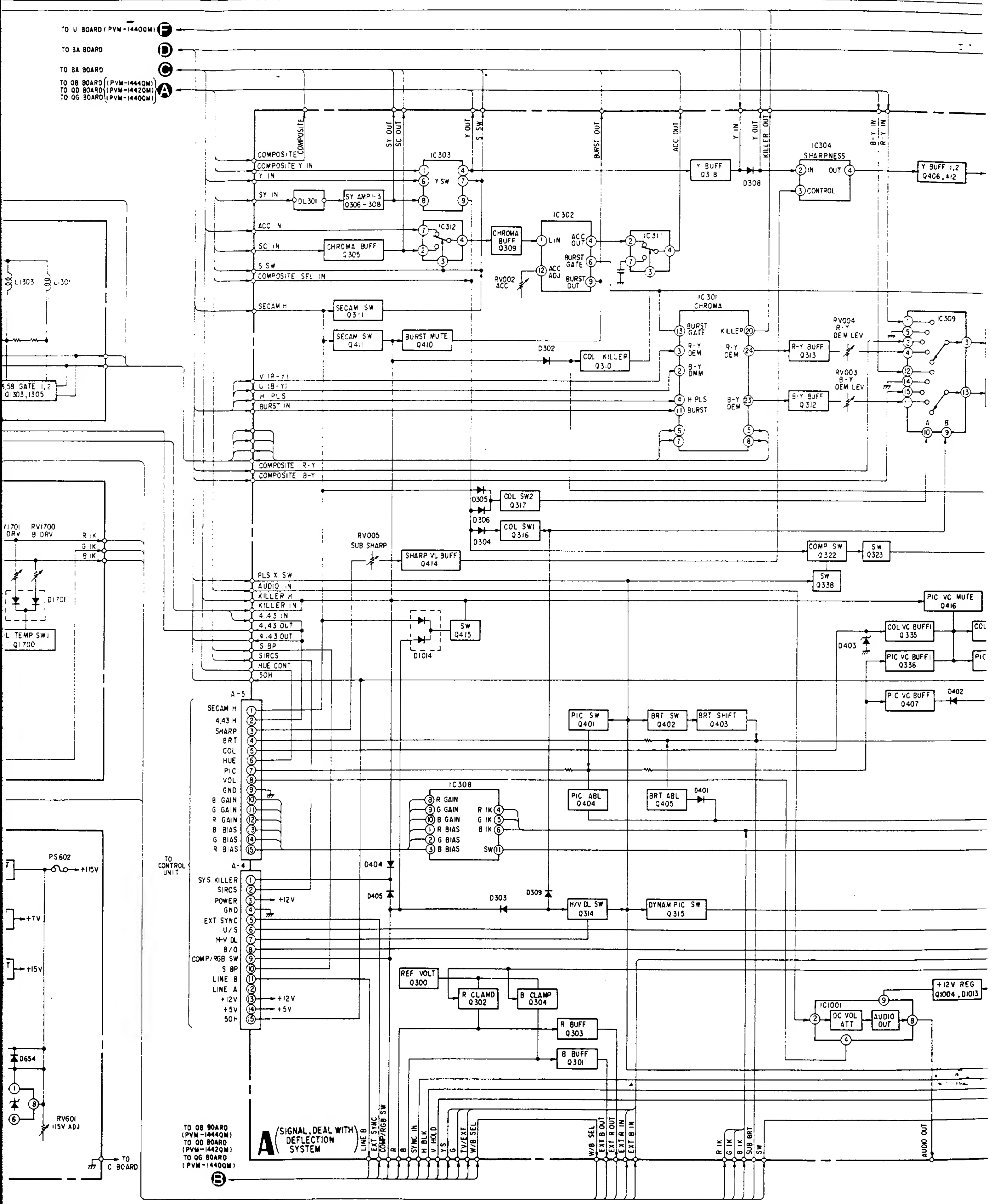
TO U BOARD (PVM-1440QM)
F
TO BA BOARD
D
TO BA BOARD
C
TO QB BOARD (PVM-1444QM)
TO QD BOARD (PVM-1442QM)
TO QG BOARD (PVM-1440QM)
A
COMPOSITE
SY OUT
SC OUT
Y OUT
S. SW
BURST OUT
ACC OUT
Y IN
Y OUT
KILLER OUT
B-Y IN
R-Y IN
COMPOSITE
COMPOSITE Y IN
Y IN
SY IN
DL301
SY AMP 1-3
Q306-308
IC303
Y SW
Y BUFF
Q318
D308
IC304
SHARPNESS
IN
OUT
CONTROL
Y BUFF 1,2
Q406,412
ACC IN
SC IN
CHROMA BUFF
Q305
IC312
CHROMA BUFF
Q309
IC302
LIN
ACC OUT
BURST GATE
ACC ADJ
BURST OUT
RV002
ACC
IC311
S SW
COMPOSITE SEL IN
L1303
L1301
SECAM H
SECAM SW
Q311
SECAM SW
Q411
BURST MUTE
Q410
IC301
CHROMA
BURST GATE
KILLER
R-Y DEM
B-Y DMM
R-Y DEM
H PLS
BURST
B-Y DEM
D302
COL KILLER
Q310
R-Y BUFF
Q313
B-Y BUFF
Q312
RV004
R-Y
DEM LEV
RV003
B-Y
DEM LEV
IC309
A
B
3.58 GATE 1,2
Q1303,1305
V (R-Y)
U (B-Y)
H PLS
BURST IN
COMPOSITE R-Y
COMPOSITE B-Y
D305
COL SW2
Q317
D306
COL SW1
Q316
D304
RV1701
R DRV
RV1700
B DRV
R IK
G IK
B IK
RV005
SUB SHARP
SHARP VL BUFF
Q414
COMP SW
Q322
SW
Q323
SW
Q338
D1701
TEMP SW
Q1700
PLS X SW
AUDIO IN
KILLER H
KILLER IN
4.43 IN
4.43 OUT
4.43 OUT
S BP
SIRCS
HUE CONT
50H
SW
Q415
D1014
PIC VC MUTE
Q416
COL VC BUFF
Q335
PIC VC BUFF
Q336
D403
PIC VC BUFF
Q407
D402
A-5
SECAM H
4.43 H
SHARP
BRT
COL
HUE
PIC
VOL
GND
B GAIN
G GAIN
R GAIN
B BIAS
G BIAS
R BIAS
PIC SW
Q401
BRT SW
Q402
BRT SHIFT
Q403
PIC ABL
Q404
BRT ABL
Q405
D401
IC308
R GAIN
G GAIN
B GAIN
R BIAS
G BIAS
B BIAS
R IK
G IK
B IK
SW
TO CONTROL UNIT
PS602
+115V
+7V
+15V
A-4
SYS KILLER
SIRCS
POWER
GND
EXT SYNC
U/S
H-V DL
B/O
COMP/RGB SW
S BP
LINE B
LINE A
+12V
+5V
50H
+12V
+12V
+5V
D404
D405
D303
D309
H/V DL SW
Q314
DYNAM PIC SW
Q315
REF VOLT
Q300
R CLAMP
Q302
B CLAMP
Q304
R BUFF
Q303
B BUFF
Q301
+12V REG
Q1004, D1013
IC1001
DC VOL ATT
AUDIO OUT
D654
RV601
115V ADJ
TO C BOARD
TO QB BOARD (PVM-1444QM)
TO QD BOARD (PVM-1442QM)
TO QG BOARD (PVM-1440QM)
A
(SIGNAL, DEAL WITH DEFLECTION SYSTEM)
B
LINE B
EXT SYNC
COMP/RGB SW
R
B
SYNC IN
H BLK
V HOLD
YS
G
TV/EXT
W/B SEL
W/B SEL
EXT B OUT
EXT R OUT
EXT R IN
EXT B IN
R IK
G IK
B IK
SUB BRT
SW
AUDIO OUT

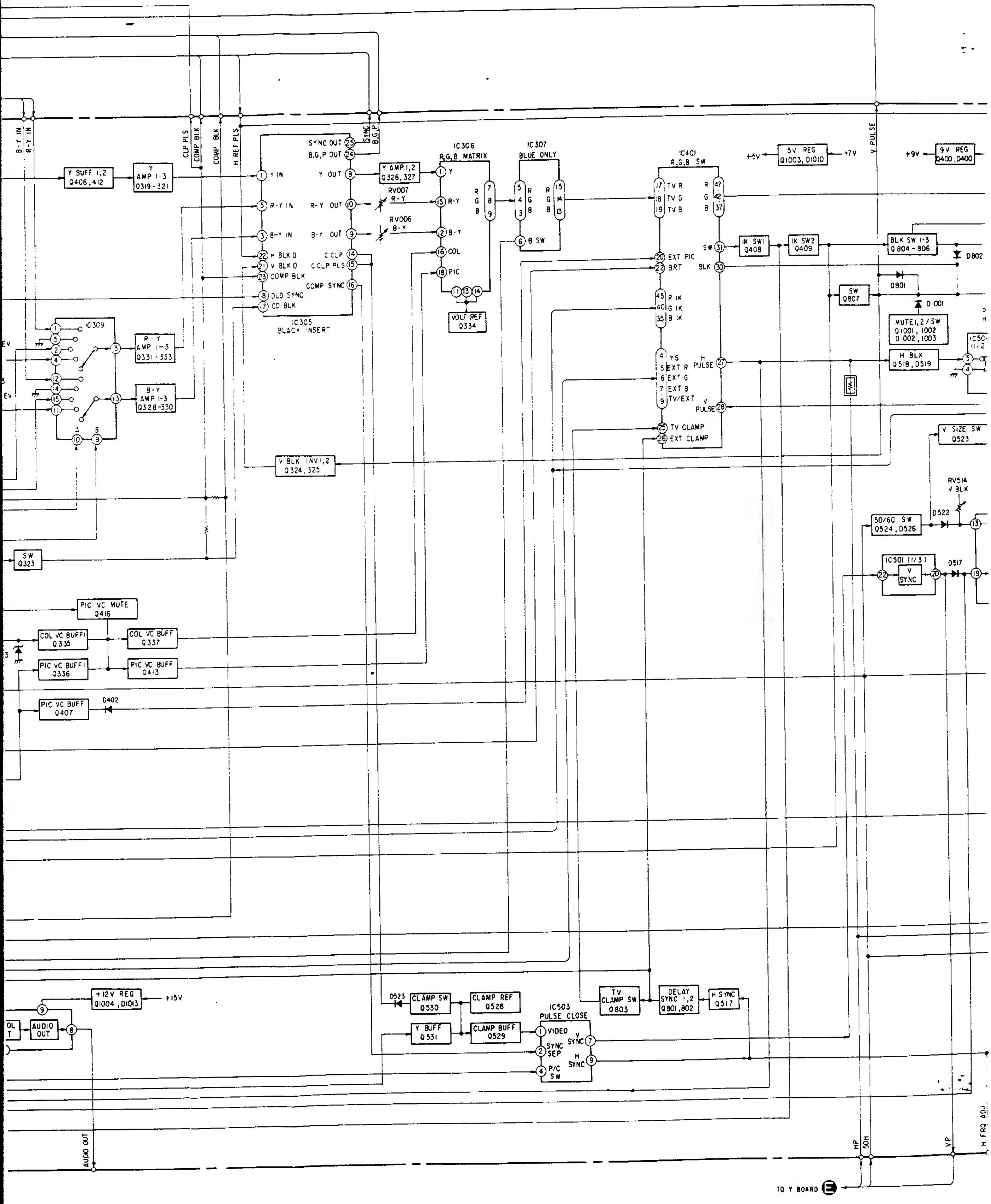
B-Y IN
R-Y IN
CLP PLS
COMP BLK
COMP BLK
H RET PLS
SYNC B.G.P
Y BUFF 1,2 Q406,412
Y AMP 1-3 Q319-321
IC305 BLACK INSERT
Y IN
R-Y IN
B-Y IN
H BLK D
V BLK D
COMP BLK
OLD SYNC
CD BLK
SYNC OUT
B,G,P OUT
Y OUT
R-Y OUT
B-Y OUT
C CLP
C CLP PLS
COMP SYNC
Y AMP 1,2 Q326,327
RV007 R-Y
RV006 B-Y
IC306 R,G,B MATRIX
Y
R-Y
B-Y
COL
PIC
R G B
VOLT REF Q334
IC307 BLUE ONLY
R G B
B SW
IC401 R,G,B SW
TV R
TV G
TV B
EXT PIC
BRT
R IK
G IK
B IK
YS
EXT R
EXT G
EXT B
TV/EXT
TV CLAMP
EXT CLAMP
SW
BLK
H PULSE
V PULSE
IK SW1 Q408
IK SW2 Q409
BLK SW 1-3 Q804-806
D802
D801
SW Q807
D1001
MUTE1,2/SW Q1001,1002 D1002,1003
H BLK Q518,D519
V PULSE
5V REG Q1003,D1010
+5V
+7V
+9V
9V REG Q400,D400
IC309
R-Y AMP 1-3 Q331-333
B-Y AMP 1-3 Q328-330
V BLK INV1,2 Q324,325
SW Q323
PIC VC MUTE Q416
COL VC BUFF1 Q335
COL VC BUFF Q337
PIC VC BUFF1 Q336
PIC VC BUFF Q413
PIC VC BUFF Q407
D402
V SIZE SW Q523
RV514 V BLK
D522
50/60 SW Q524,D526
IC501 (1/3) V SYNC
D517
+12V REG Q1004,D1013
+15V
AUDIO OUT
AUDIO OUT
D523
CLAMP SW Q530
CLAMP REF Q528
Y BUFF Q531
CLAMP BUFF Q529
IC503 PULSE CLOSE
VIDEO
SYNC SEP
P/C SW
V SYNC
H SYNC
TV CLAMP SW Q803
DELAY SYNC 1,2 Q801,802
H SYNC Q517
HP
50H
VP
H FRQ ADJ
TO Y BOARD E

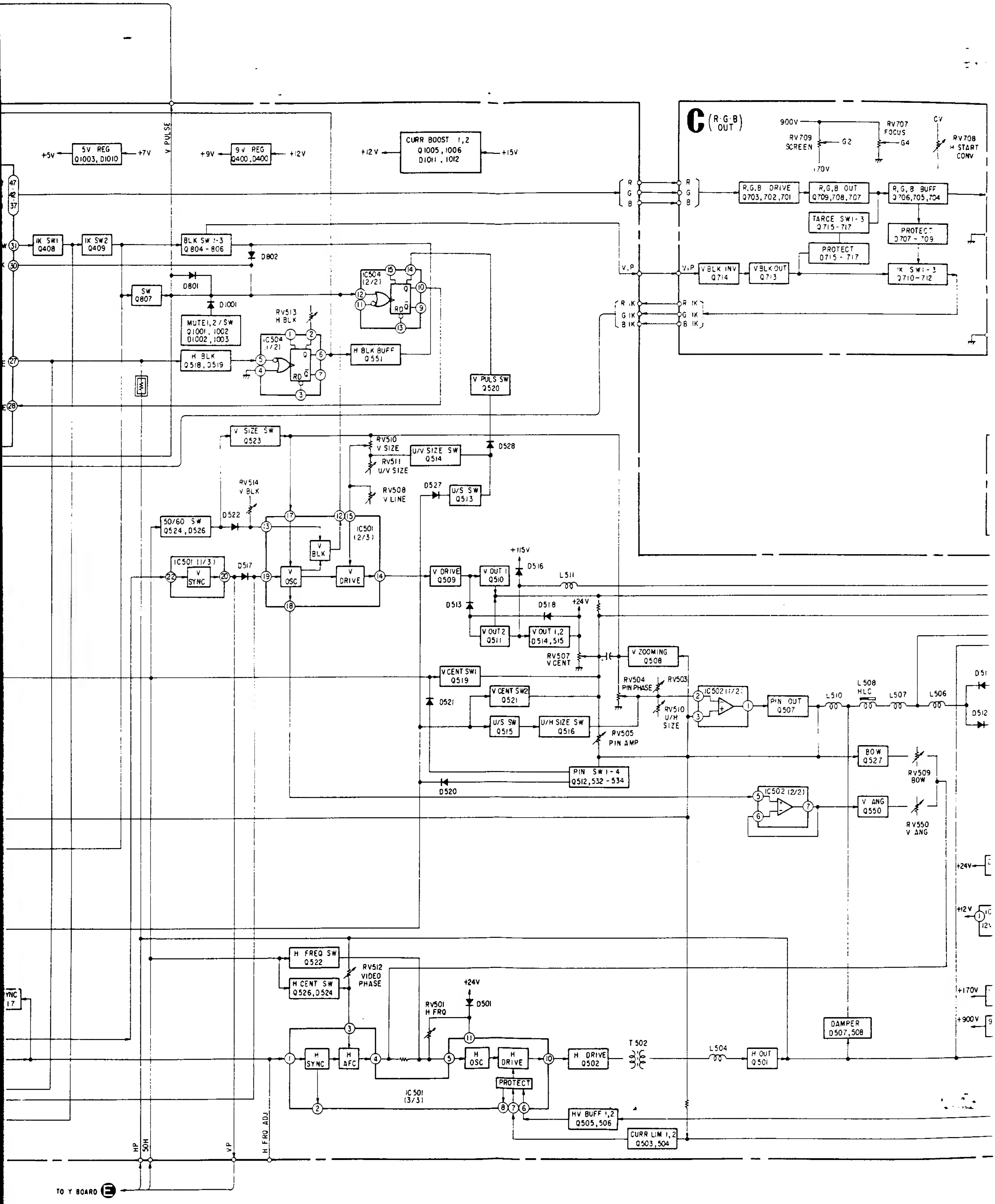
5V REG
Q1003, D1010
+5V
+7V
V PULSE
9V REG
Q400, D400
+9V
+12V
CURR BOOST 1,2
Q1005, 1006
D1011, 1012
+12V
+15V
47
42
37
31
30
27
28
IK SW1
Q408
IK SW2
Q409
BLK SW 1-3
Q804 - 806
D802
D801
SW
Q807
D1001
MUTE1,2/SW
Q1001, 1002
D1002, 1003
IC504
(2/2)
RV513
H BLK
IC504
(1/2)
H BLK
Q518, D519
H BLK BUFF
Q551
V PULS SW
Q520
R
G
B
V, P
R IK
G IK
B IK
C
(R·G·B OUT)
900V
RV707
FOCUS
CV
RV709
SCREEN
G2
G4
RV708
H START
CONV
170V
R,G,B DRIVE
Q703, 702, 701
R,G,B OUT
Q709, 708, 707
R,G,B BUFF
Q706, 705, 704
TARCE SW1-3
Q715-717
PROTECT
Q707 - 709
PROTECT
Q715 - 717
V BLK INV
Q714
V BLK OUT
Q713
IK SW1-3
Q710-712
V SIZE SW
Q523
RV510
V SIZE
RV511
U/V SIZE
U/V SIZE SW
Q514
D528
RV514
V BLK
RV508
V LINE
D527
U/S SW
Q513
50/60 SW
Q524, D526
D522
IC501
(2/3)
V BLK
V OSC
V DRIVE
IC501 (1/3)
V SYNC
D517
+115V
D516
L511
V DRIVE
Q509
V OUT 1
Q510
D513
D518
+24V
V OUT 2
Q511
V OUT 1,2
Q514, 515
RV507
V CENT
V ZOOMING
Q508
V CENT SW1
Q519
V CENT SW2
Q521
D521
RV504
PIN PHASE
RV503
IC502 (1/2)
PIN OUT
Q507
L510
L508
HLC
L507
L506
D511
D512
RV510
U/H
SIZE
U/S SW
Q515
U/H SIZE SW
Q516
RV505
PIN AMP
BOW
Q527
RV509
BOW
PIN SW1-4
Q512, 532 - 534
D520
IC502 (2/2)
V ANG
Q550
RV550
V ANG
+24V
+12V
12V
H FREQ SW
Q522
RV512
VIDEO
PHASE
H CENT SW
Q526, Q524
+24V
D501
RV501
H FRQ
SYNC
17
H SYNC
H AFC
H OSC
H DRIVE
PROTECT
IC501
(3/3)
H DRIVE
Q502
T502
L504
H OUT
Q501
DAMPER
D507, 508
+170V
+900V
HV BUFF 1,2
Q505, 506
CURR LIM 1,2
Q503, 504
HP
50H
VP
H FRQ ADJ
TO Y BOARD
E

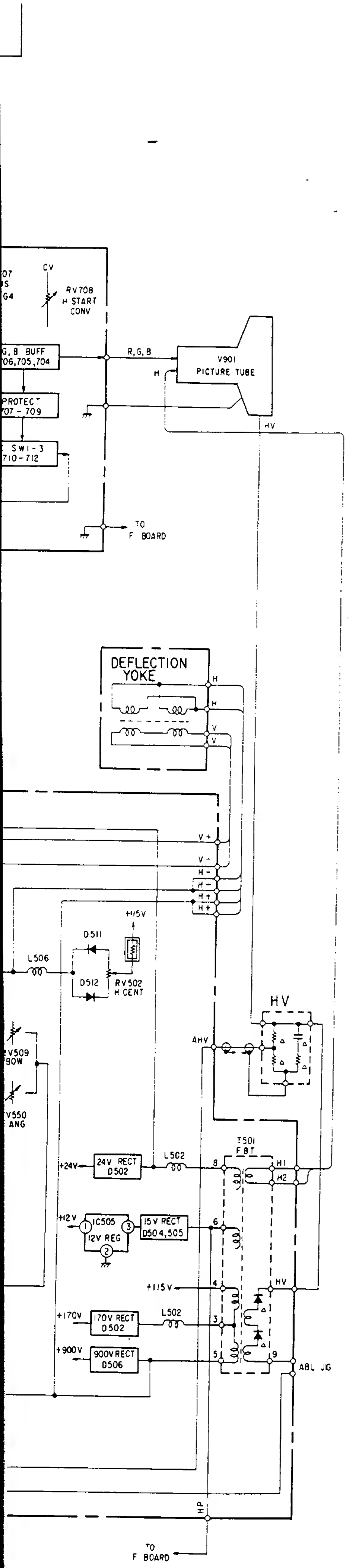
07
S
G4
CV
RV708
H START
CONV
G, B BUFF
06,705,704
R, G, B
V901
PICTURE TUBE
H
PROTECT
07 - 709
SW1-3
710-712
HV
TO
F BOARD
DEFLECTION
YOKE
H
H
V
V
V +
V -
H -
H -
H +
H +
+115V
D511
L506
D512
RV502
H CENT
HV
AHV
V509
BOW
V550
ANG
T501
FBT
+24V
24V RECT
D502
L502
8
H1
H2
+12V
IC505
12V REG
1
2
3
15V RECT
D504,505
6
+115V
4
HV
+170V
170V RECT
D502
L502
3
+900V
900V RECT
D506
5
9
ABL JIG
HP
TO
F BOARD

6-3. PRINTED WIRING BOARDS *– Conductor Side –*

– A Board –

A [SIGNAL PROCESS, DEFL

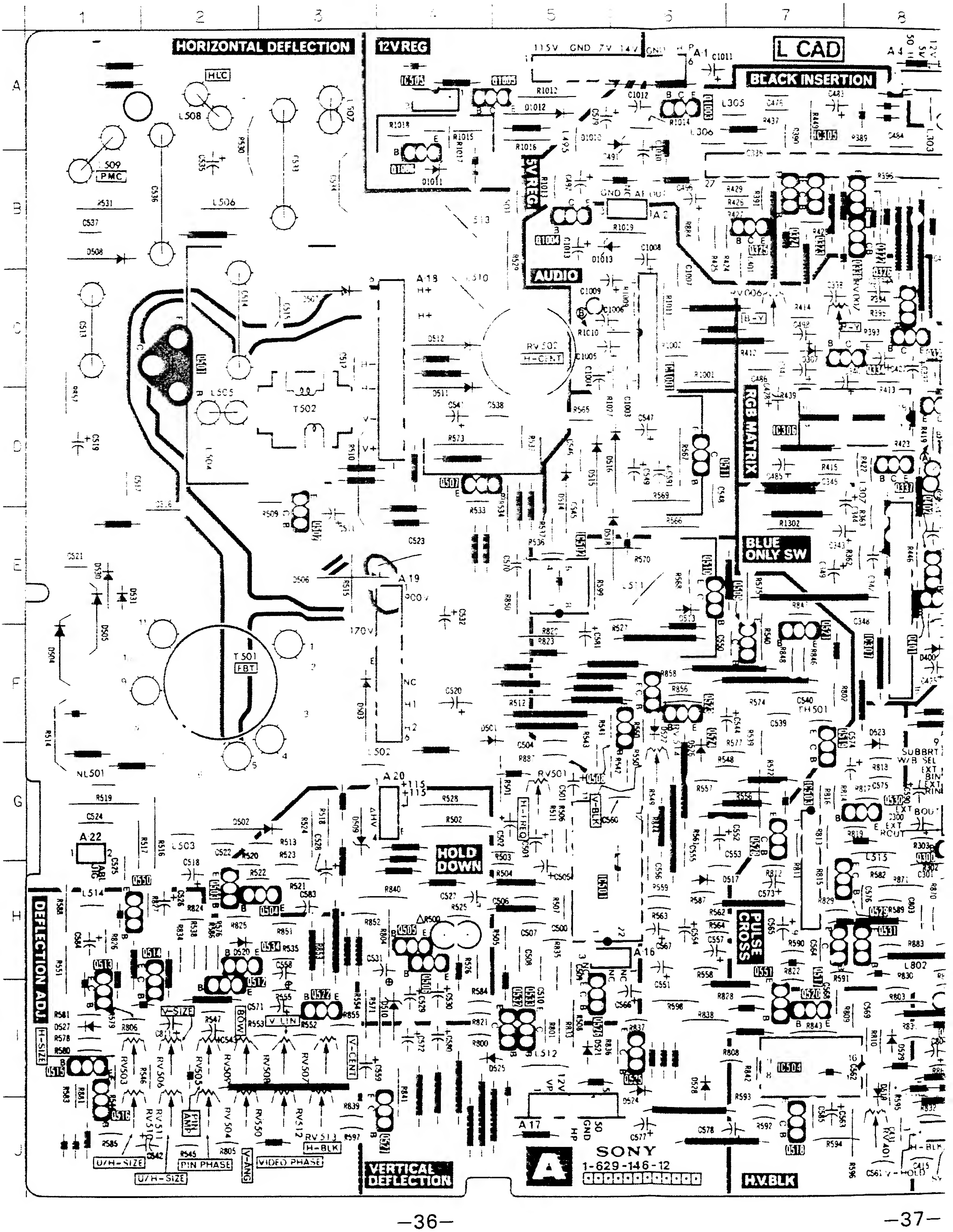
1
2
3
4
5
6
7
8
A
B
C
D
E
F
G
H
I
J
HORIZONTAL DEFLECTION
12VREG
L CAD
BLACK INSERTION
5V REG
AUDIO
RGB MATRIX
BLUE ONLY SW
HOLD DOWN
PULSE CROSS
DEFLECTION ADJ.
VERTICAL DEFLECTION
H.V.BLK
HLC
PMC
L508
L509
L506
L507
T502
T501
FBT
RV502
H-CENT
A 18
A 19
A 20
A 22
A 16
A 17
A 1
A 2
A 4
115V GND 7V 14V
GND AF OUT
H+
170V
200V
NC
H1
H2
NL501
ABL
H-FREQ
V-BLK
V-SIZE
BOW
V LIN
V-CENT
H-SIZE
PIN AMP
PIN PHASE
V-ANG
VIDEO PHASE
U/H-SIZE
H-BLK
RV501
RV503
RV504
RV505
RV506
RV507
RV508
RV509
RV510
RV511
RV512
RV513
RV550
RV401
B-Y
R-Y
SUBBRT
W/B SEL
EXT BIN
EXT RIN
EXT BOUT
EXT RCUT
12V
VP
GND
HP
SONY
1-629-146-12

A [SIGNAL PROCESS, DEFLECTION SYSTEM]

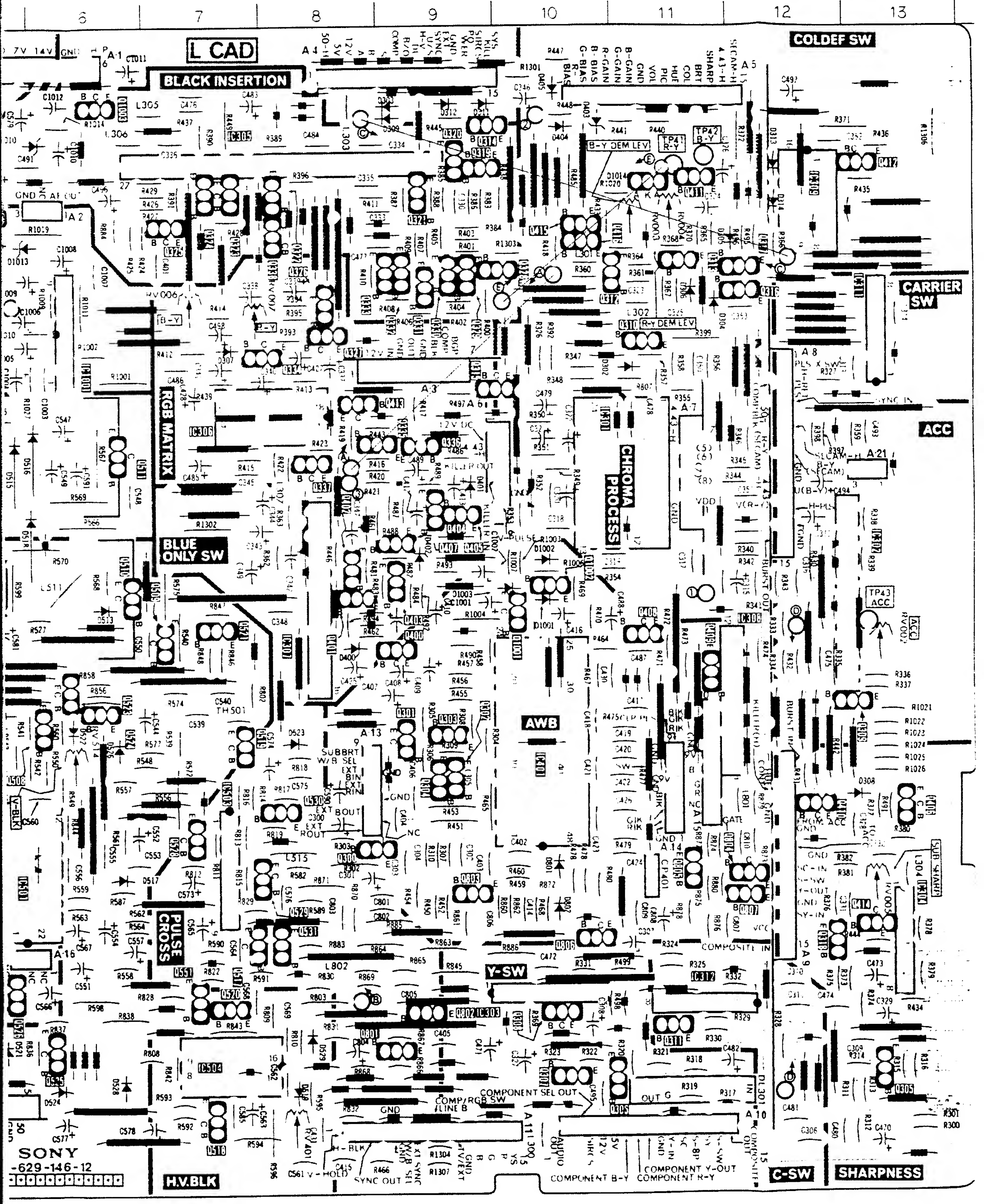
6
7
8
9
10
11
12
13
L CAD
BLACK INSERTION
COLDEF SW
CARRIER SW
ACC
RGB MATRIX
BLUE ONLY SW
CHROMA PROCESS
AWB
PULSE CROSS
Y-SW
H.V.BLK
C-SW
SHARPNESS
B-Y DEM LEV
R-Y DEM LEV
COMPOSITE IN
COMPONENT SEL OUT
COMP/RGB SW
COMPONENT B-Y
COMPONENT R-Y
COMPONENT Y-OUT
SYNC OUT
SONY
-629-146-12

R1306
RRIER
W
ACC
SUB SHARP
R378
R379
R301
R300

IC	
IC301	D-11
IC302	E-13
IC303	I-10
IC304	H-13
IC305	B-7
IC306	D-8
IC307	E-8
IC308	F-12
IC309	B-12
IC311	C-13
IC312	I-11
IC401	G-10
IC501	H-5
IC502	E-5
IC503	H-7
IC504	I-7
IC505	A-4
IC1001	C-6

TRANSISTOR	
Q300	G-8
Q301	G-9
Q302	G-9
Q303	G-9
Q304	G-9
Q305	I-13
Q306	I-11
Q307	I-10
Q308	I-10
Q309	I-13
Q310	C-11
Q311	I-11
Q312	C-11
Q313	B-11
Q314	A-9
Q315	D-9
Q316	C-12
Q317	C-12
Q318	H-12
Q319	B-9
Q320	B-9
Q321	B-9
Q322	B-8
Q323	B-7
Q324	B-7
Q325	B-7
Q326	C-8
Q327	C-8
Q328	C-9
Q329	C-9
Q330	C-9
Q331	C-9
Q332	C-9
Q333	C-9
Q334	C-8
Q335	D-9
Q336	D-9
Q337	D-8
Q338	B-8
Q400	F-9
Q401	E-8
Q402	E-8
Q403	E-9
Q404	E-9
Q405	E-9
Q406	G-13
Q407	E-9
Q408	F-11
Q409	F-11
Q410	G-12
Q411	B-11
Q412	B-13
Q413	D-8
Q414	H-13
Q415	B-10
Q416	B-10
Q501	C-2
Q502	E-3
Q503	H-2
Q504	H-2
Q505	H-4
Q506	H-4
Q507	D-4
Q508	F-6
Q509	F-7
Q510	E-6
Q511	D-6
Q512	I-2
Q513	I-1
Q514	I-2
Q515	I-1
Q516	J-1
Q517	H-7
Q518	J-7
Q519	G-7
Q520	I-7
Q521	F-7
Q522	I-3
Q523	F-6
Q524	F-6
Q525	I-6
Q526	I-5
Q528	G-7
Q529	H-8
Q530	G-8
Q531	H-8
Q532	I-5
Q533	I-5
Q534	H-2
Q550	H-1
Q551	I-7
Q801	I-9
Q802	I-9
Q803	H-9
Q804	H-12
Q805	H-11
Q806	H-10
Q807	H-12
Q1001	E-10
Q1002	E-10
Q1003	A-6
Q1004	B-5
Q1005	A-4
Q1006	B-4

DIODE	
D302	C-11
D303	A-9
D304	C-12
D305	B-11
D306	C-11
D307	C-7
D308	G-13
D309	A-9
D311	A-9
D312	A-9
D400	F-8
D401	D-9
D402	E-9
D403	A-10
D404	A-10
D405	A-10
D501	G-4
D502	G-2
D503	F-3
D504	F-1
D505	E-1
D506	E-3
D507	C-3
D508	B-1
D509	G-3
D510	I-4
D511	D-4
D512	C-4
D513	E-6
D514	D-5
D515	D-4
D516	D-6
D517	H-6
D518	E-6
D519	J-8
D520	H-2
D521	I-5
D522	F-6
D523	G-8
D524	J-6
D526	G-6
D527	I-1
D528	I-6
D529	I-8
D530	E-1
D531	E-1
D801	H-10
D802	H-10
D1001	E-10
D1002	E-10
D1003	E-10
D1010	A-6
D1011	B-4
D1012	A-5
D1013	B-5
D1014	B-11

VARIABLE RESISTOR	
RV002	E-13
RV003	B-11
RV004	B-11
RV005	H-13
RV006	C-7
RV007	C-7
RV501	G-5
RV502	C-5
RV503	I-1
RV504	J-2
RV505	I-2
RV506	I-2
RV507	I-3
RV508	I-3
RV509	I-2
RV510	J-1
RV511	J-2
RV512	J-3
RV513	J-3
RV514	G-6
RV550	J-2

— U Board — (PVM-1440QM

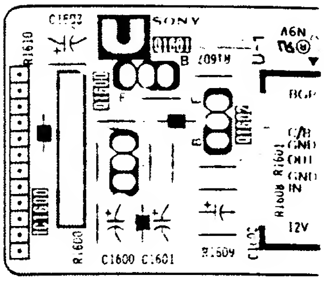
SONY
Q1601
C1600
C1601
R1609
GND
12V
U

— W Board —

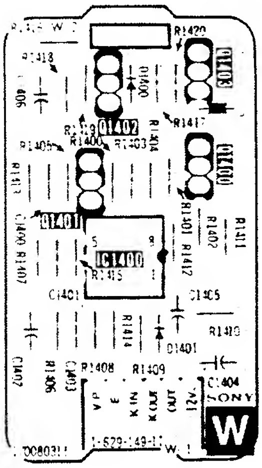
R1420
R1418
R1417
Q1402
Q1401
IC1400
R1415
C1401
C1405
R1414
D1401
R1408
R1409
C1404
SONY
1-629-149-11
W

— XA Board —

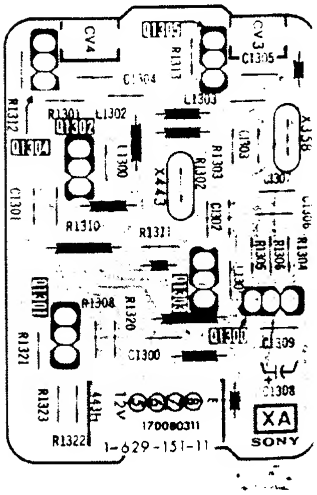
CV4
CV3
Q1305
C1305
C1304
L1303
R1312
R1301
L1302
Q1302
Q1304
C1300
X443
R1310
R1311
R1308
R1320
C1300
Q1300
C1309
C1308
R1321
R1323
R1322
12V
XA
SONY
1-629-151-11

U DYNAMIC PICTURE

W 3.58/4.43 DISTINCTION

XA CRYSTAL OSC

Y 50/60 DISTINCTION

ard – (PVM-1440QM)

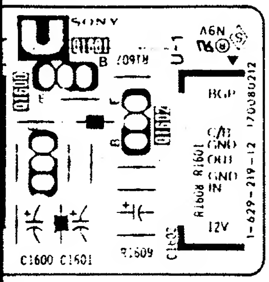
U
SONY
Q1401
U-1
BGP
C/R
GND
OUT
GND
IN
12V
R1608 R1601
1-629-219-12 170080212
C1600 C1601
R1609
C1602

– Y Board –

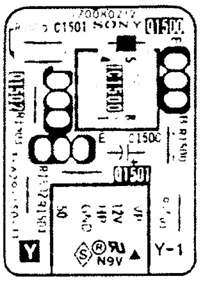
C1501 SONY
Q1500
IC1500
C1500
Q1501
12V
VP
GND
Y
Y-1
N9V

ard –

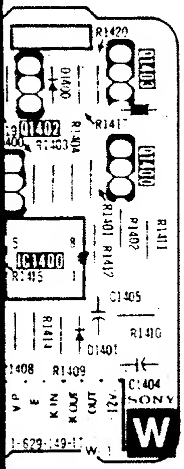
R1420
Q1403
D1400
Q1402
R1404
R1403
Q1401
R1401
R1402
R1412
R1411
IC1400
R1415
C1405
R1410
D1401
R1408
R1409
C1404
SONY
VP
KIN
KOUT
OUT
12V
1-629-149-11
W-1
W

3oard –

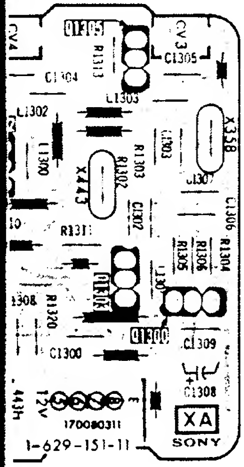
Q1305
R1313
CV3
C1305
C1304
L1303
L1302
X358
X443
R1303
R1302
C1303
L1307
C1306
R1304
R1311
C1302
Q1301
R1305
R1306
R1308
R1320
Q1300
C1309
C1300
C1308
12V
443H
170080311
1-629-151-11
XA
SONY

A BOARD WAVEFORM

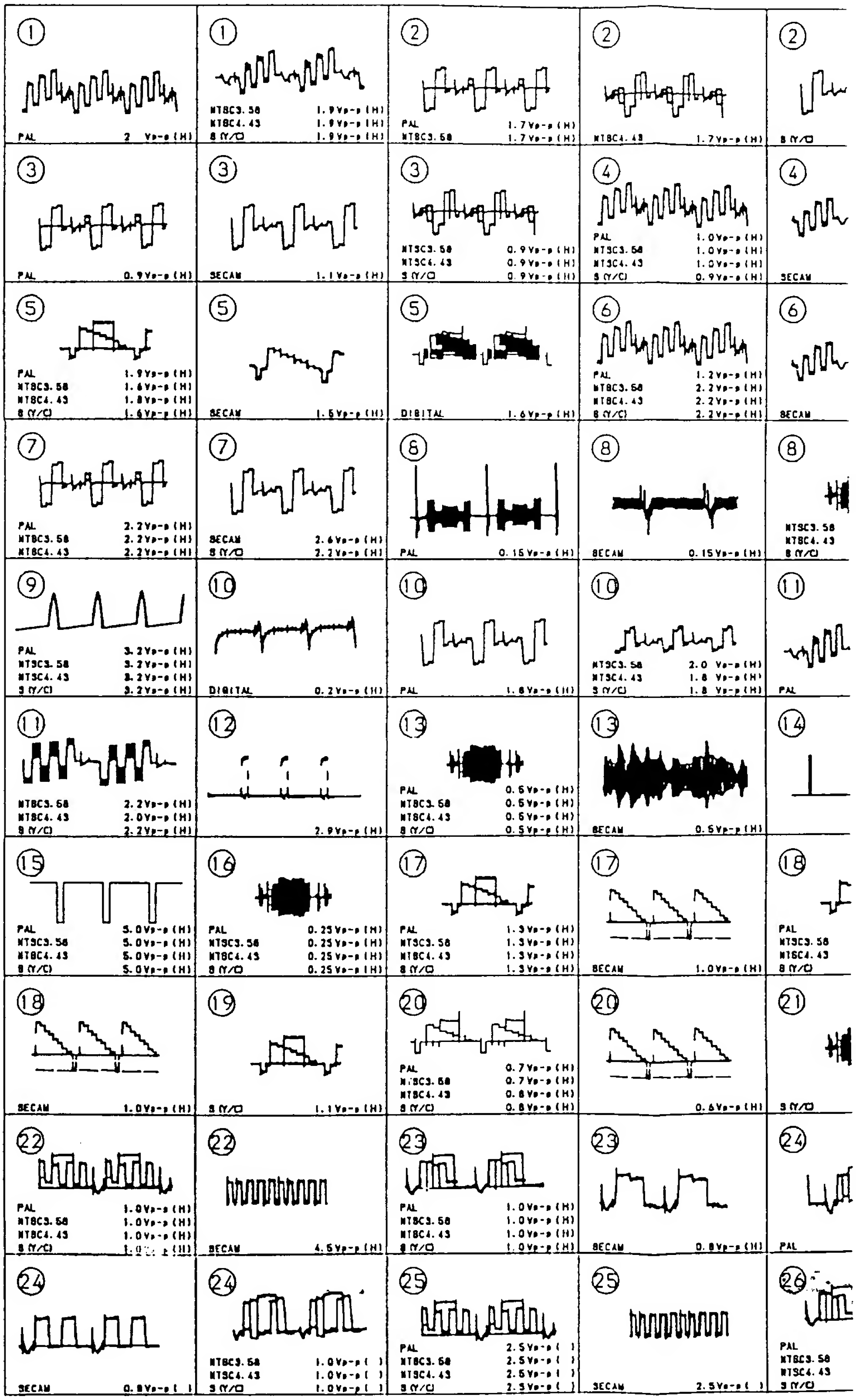

For Service Manuals
MAURITRON SERVICES
8 Cherry Tree Road, Chinnor
Oxfordshire, OX9 4QY.
Tel (01844) 351694
Fax (01844) 352554
email:- mauritron@dial.pipex.com

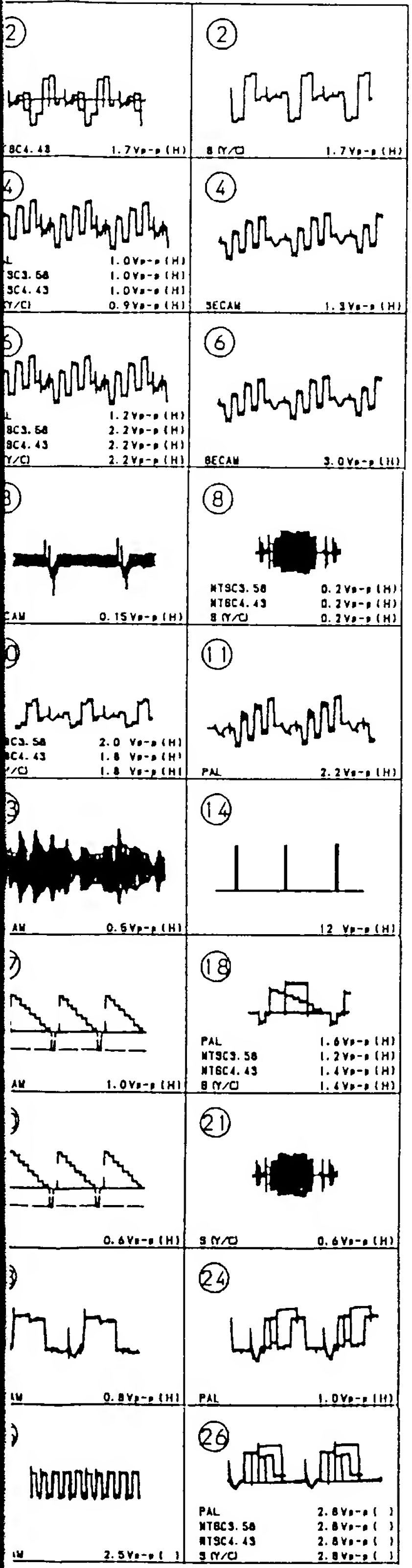

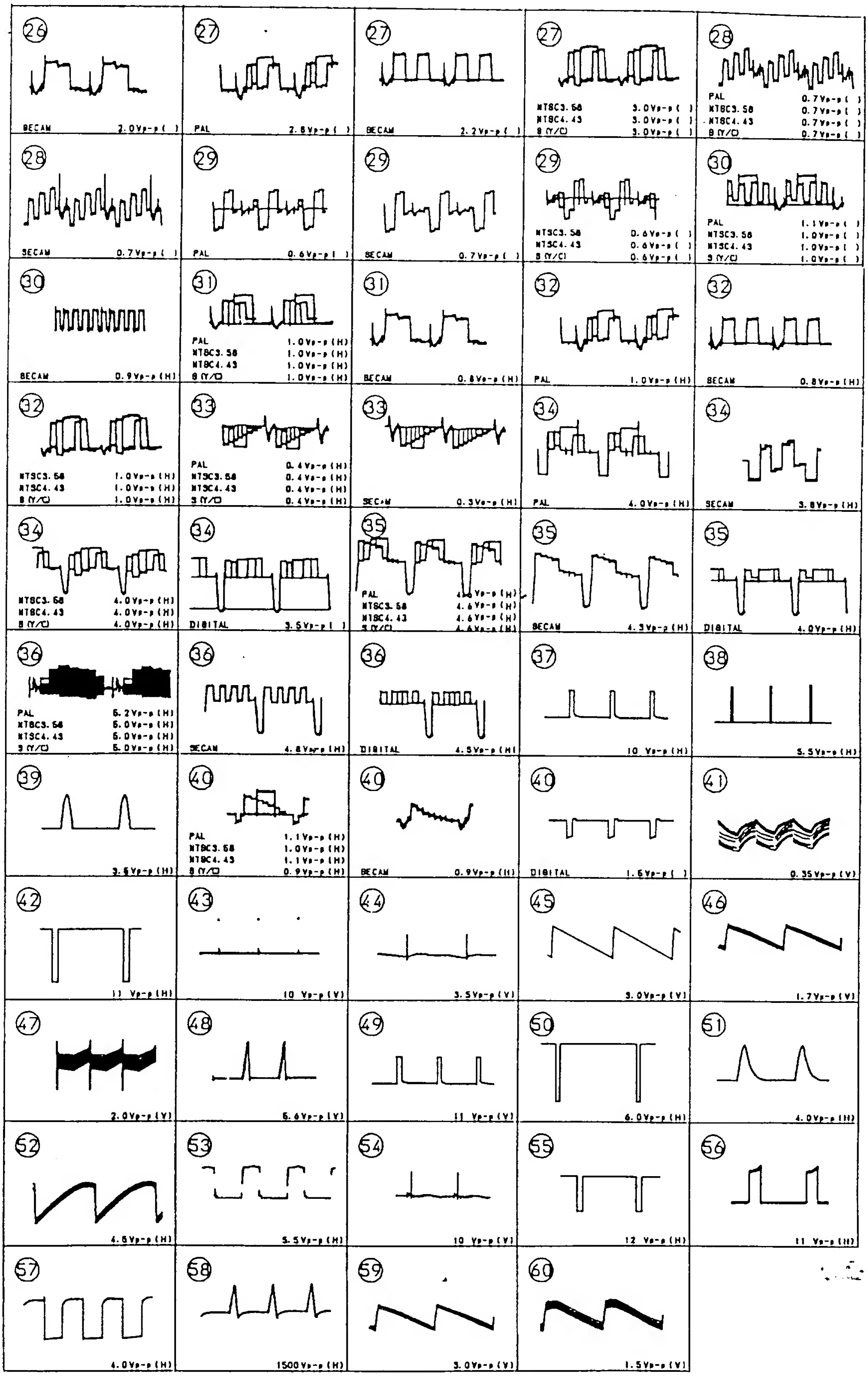

. CIRCUIT BOARDS LOCATION

6-5. SCHEMATIC DIAGRAMS

1 2 3 4 5 6 7 8

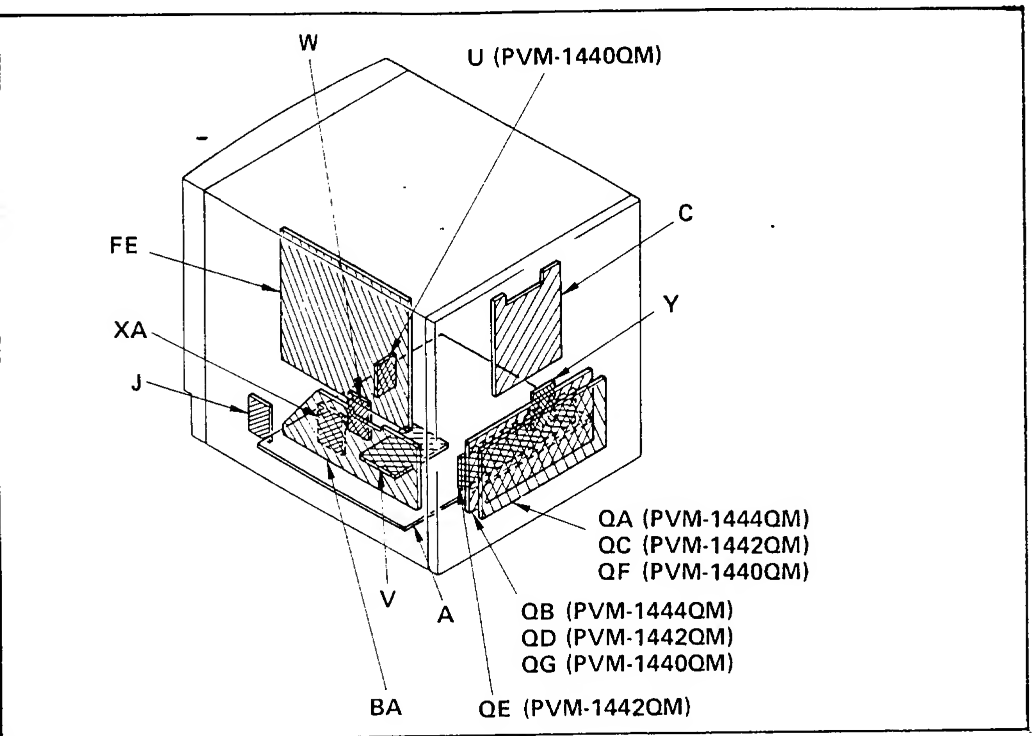
W
U (PVM-1440QM)
C
FE
Y
XA
J
QA (PVM-1444QM)
QC (PVM-1442QM)
QF (PVM-1440QM)
V
A
QB (PVM-1444QM)
QD (PVM-1442QM)
QG (PVM-1440QM)
BA
QE (PVM-1442QM)

The inner schematic diagrams (IC302, 304, 305, 307, 308, 503): See page 66–68

ote :

- All capacitors are in µF unless otherwise noted. pF : µµF 50 WV or less are not indicated except for electrolytics.
- Indication of resistance, which does not have one for rating electrical power, is as follows.

Pitch : 5 mm
Rating electrical power 1/4W

- All resistors are in ohms.

⊟ : nonflammable resistor.
∿ : fusible resistor.
△ : internal component.
▭ : panel designation and adjustment for repair.

- All variable and adjustable resistors have characteristic curve B, unless otherwise noted.
- When replacing the part in below table be sure to perform the related adjustment.

Part replaced	Adjustment (※)
IC501, Q503, Q504, Q505, Q506, D509, D510, C505, C520, C524, C525, C526, C527, C528, C529, C530, C531, R500, R506, R516, R517, R518, R519, R520, R521, R522, R523, R524, R525, R526, R528, R804, NL501, HVR	R500 (HOLD-DOWN)

- All voltages are in V.
- Voltage are dc with respect to ground unless otherwise noted.
- Readings are taken with a color-bar signal input.
- Readings are taken with a PAL color-bar signal input.
- Voltage variations may be noted due to normal production tolerance.

━━ : B+ bus.
━ ━ : B− bus.
▨ : signal path.
No mark : with PAL color-bar signal received or common voltage.
( ) : with SECAM color-bar signal received.
< > : with NTSC 3.58 color-bar signal received.
: with NTSC 4.43 color-bar signal received.

A BOARD

IC NO	PIN NO	PAL	SECAM	NTSC 3.58	NTSC 4.43	S-VIDEO	DIGITAL
IC301	[illegible]	8.6	8.6	8.6	8.6	8.6	8.
	[illegible]	8.4	2.2	8.	8.4	8.4	2.2
	[illegible]	6.5	7.5	6.5	6.5	6.5	7.5
IC302	[illegible]	1.4	1.4	1.4	1.4	1.4	2.3
IC303	[illegible]	0	0	0	0	3.8	0.4
IC304	[illegible]	0	2.8	2.8	2.8	2.4	2.4
IC305	③	7.0	10.2	7.0	7.0	7.0	7.0
	④	6.4	9.6	6.4	5.4		
	⑤	6.9	10.2	6.9	6.9	6.9	6.9
	⑥	6.3	9.6	6.4	5.4	6.4	6.4
	[illegible]	6.8	10.0	6.8	6.9		
IC306	[illegible]	7.9	9.5	7.4	6.1	6.1	6.1
	[illegible]	6.4	6.3	5.3	5.0	5.0	5.1
IC309	①	1.1	1.7	3.0	1.8	1.5	
	③	9.1	10.5	9.1	9.1	9.1	
	④	9.1	8.9	9.1	9.1	9.1	
	[illegible]	12.3	0.	12.3	12.3	12.3	
	[illegible]	9.	10.5	9.			
IC311	[illegible]	4.3	0	4.3	4.3	4.3	0
	[illegible]	7.3	7.0	7.3	7.3	7.3	8.0
IC312	[illegible]	0	0	0	0	4.9	0.5
IC401	[illegible]	2.8	0.9	[illegible]	0.9	0.9	1.1
	[illegible]	3.9	4.4	4.4	4.4	4.4	4.8
	⑨	4.4	5.3	5.3	5.3	5.3	0
	[illegible]	5.3	5.0	5.0	5.0	6.0	5.1
	[illegible]	6.0	5.7	5.5	3.5	2.6	2.6
	㉝	4.3	1.2	1.2	0.8	0.6	0.6
	㉟	0.7	0.2	0.3	0	0	0
	㊴	0.4	0.8	1.1	0.7	0.7	0.7
	㊵	0.5	0.2	0.3	0	0	0
	㊹	0.3	1.0	0.7	0.6	0.6	0.6
	㊺	2.9	3.1	3.2	3.1	3.0	3.0
IC503	[illegible]	2.9	1.0	1.0	1.0	1.0	1.6

Q NO.		PAL	SECAM	NTSC 3.58	NTSC 4.43	S-VIDEO	DIGITAL
Q310	B	4.3	0	4.3	4.3		
	C	0.2	0	0.2	0.2		
	E						
Q316	B	0	0.2	0.3	0	0	0
	C						
	E						
Q317	B	0	11.7	0.3	0	0.3	0
	C	12.3	0.1	12.3	12.3	12.3	12.3
	E						
Q322	B						
	C	0	0.2	0.3	0	0	0
	E						
Q323	B	0	0.2	0.3	0	0	0
	C						
	E						
Q328	B	9.1	10.5	9.1	9.1		
	C	2.5	1.2	2.5	2.5		
	E	9.8	11.2	9.8	9.8		
Q329	B	2.5	1.2	2.5	2.5		
	C	7.5	10.9	7.4	7.5		
	E	1.9	0.5	1.9	1.9		
Q330	B	7.6	10.8	[illegible]	7.5		
	C	12.3	[illegible]	12.	12.		
	E	[illegible]	[illegible]	[illegible]	[illegible]		
Q331	B	9.1	10.5	9.1	9.1		
	C	2.	[illegible]	2.5	2.5		
	E	2.3	[illegible]	[illegible]	[illegible]		
Q332	B	[illegible]	[illegible]				
	C	[illegible]	[illegible]				
	E	[illegible]	[illegible]				
Q333	B	[illegible]	[illegible]				
	C	12.	[illegible]				
	E	[illegible]	[illegible]				

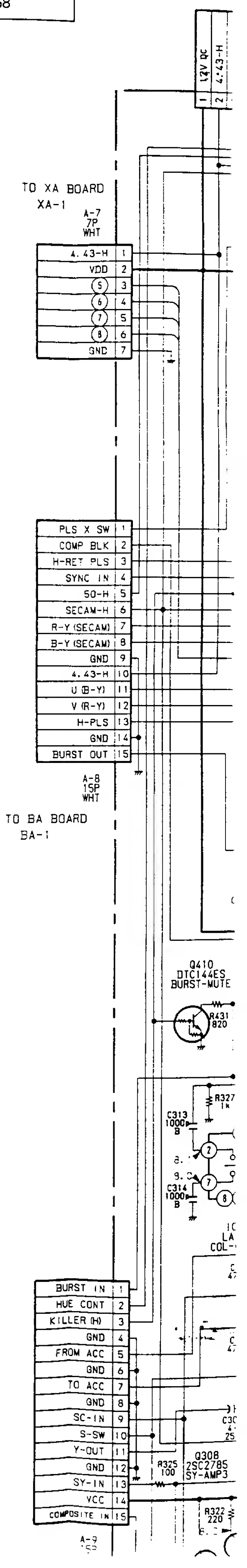
12V QC
4.43-H
TO XA BOARD
XA-1
A-7
7P
WHT
4.43-H 1
VDD 2
⑤ 3
⑥ 4
⑦ 5
⑧ 6
GND 7
PLS X SW 1
COMP BLK 2
H-RET PLS 3
SYNC IN 4
50-H 5
SECAM-H 6
R-Y (SECAM) 7
B-Y (SECAM) 8
GND 9
4.43-H 10
U (B-Y) 11
V (R-Y) 12
H-PLS 13
GND 14
BURST OUT 15
A-8
15P
WHT
TO BA BOARD
BA-1
Q410
DTC144ES
BURST-MUTE
R431
820
R327
1k
C313
1000p
B
C314
1000p
B
BURST IN 1
HUE CONT 2
KILLER (H) 3
GND 4
FROM ACC 5
GND 6
TO ACC 7
GND 8
SC-IN 9
S-SW 10
Y-OUT 11
GND 12
SY-IN 13
VCC 14
COMPOSITE IN 15
A-9
R325
100
Q308
2SC2785
SY-AMP3
R322
220

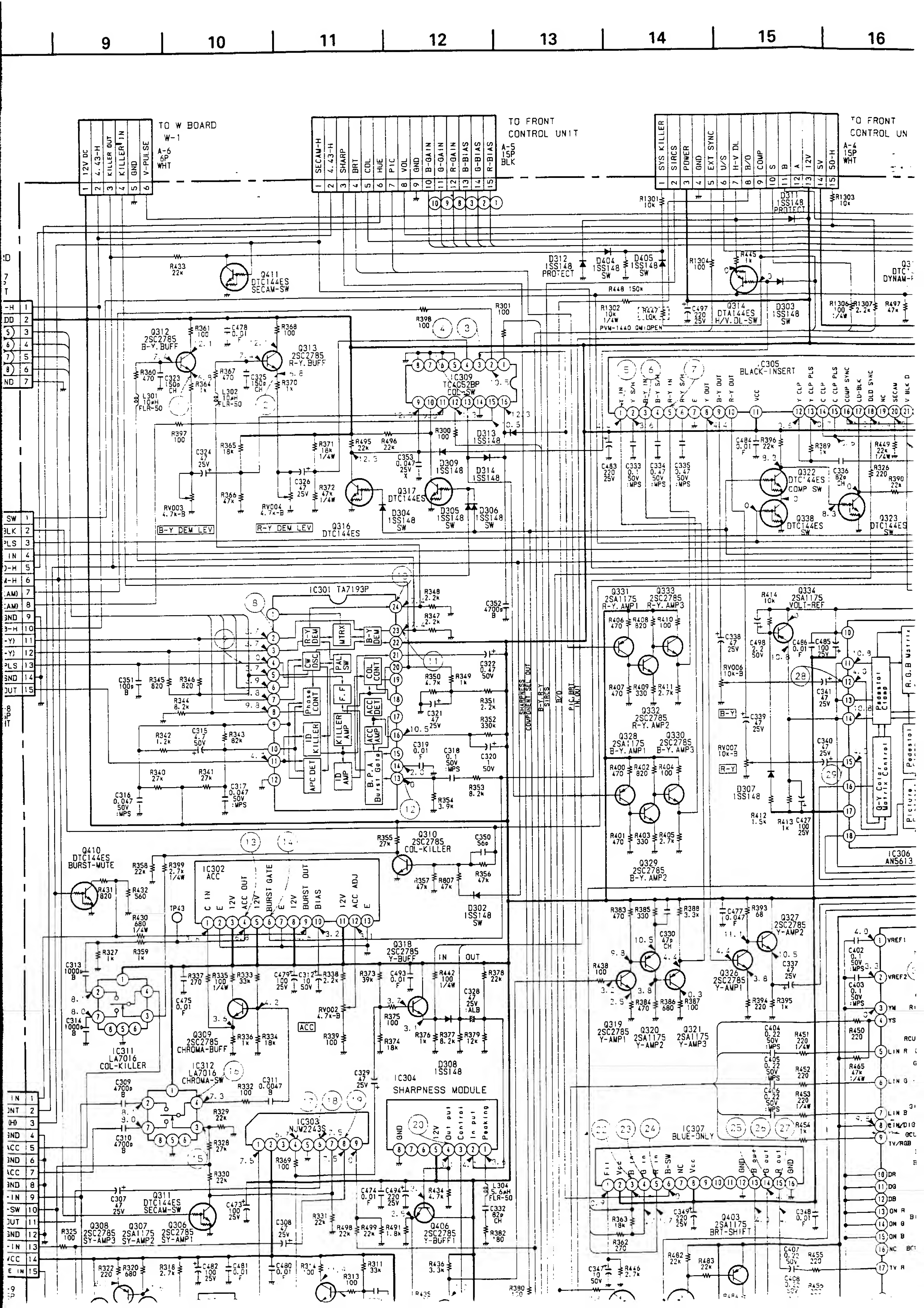
9
10
11
12
13
14
15
16
TO W BOARD W-1
A-6 6P WHT
12V DC
4.43-H
KILLER OUT
KILLER IN
GND
V-PULSE
TO FRONT CONTROL UNIT
A-5 15P BLK
SECAM-H
4.43-H
SHARP
BRT
COL
HUE
PIC
VOL
GND
B-GAIN
G-GAIN
R-GAIN
B-BIAS
G-BIAS
R-BIAS
TO FRONT CONTROL UN
A-4 15P WHT
SYS KILLER
SIRCS
POWER
GND
EXT SYNC
U/S
H-V DL
B/O
COMP
S
B
A
12V
5V
50-H
R1301 10k
D311 1SS148 PROTECT
R1303 10k
R433 22k
Q411 DTC144ES SECAM-SW
D312 1SS148 PROTECT
D404 1SS148 SW
D405 1SS148 SW
R1304 100
R445 1k
Q314 DTA144ES H/V.DL-SW
D303 1SS148 SW
R448 150k
R1302 10k 1/4W
R447 1.10k
C497 220 25V
PVM-1440 QM:OPEN
R1306 100 1/4W
R1307 2.2k
R497 47k
Q312 2SC2785 B-Y.BUFF
R361 100
C478 0.01 F
R368 100
Q313 2SC2785 R-Y.BUFF
R360 470
C323 150p CH
R364 1k
R367 470
C325 150p CH
R370 1k
L301 10μH FLR-50
L302 10μH FLR-50
R398 100
R301 100
IC309 TC4052BP COL-SW
R397 100
R300 100
D313 1SS148
R365 18k
C324 47 25V
R371 18k 1/4W
R495 22k
R496 22k
C353 0.047 25V
D309 1SS148
D314 1SS148
C326 47 25V
R372 47k 1/4W
R366 47k
RV003 4.7k-B
RV004 4.7k-B
Q317 DTC144ES
D304 1SS148 SW
D305 1SS148 SW
D306 1SS148 SW
Q316 DTC144ES
B-Y DEM LEV
R-Y DEM LEV
C305 BLACK-INSERT
Y IN
Y S/H
B-Y IN
B-Y S/H
R-Y IN
R-Y S/H
E
Y OUT
B-Y OUT
R-Y OUT
VCC
Y CLP
Y CLP PLS
C CLP
C CLP PLS
COMP SYNC
LD-BLK
DLD SYNC
NC
SECAM
V BLK D
C483 220 25V
C333 0.1 50V :MPS
C334 0.47 50V :MPS
C335 0.47 50V :MPS
C484 0.01 F
R396 22k
R389 1k
R449 22k 1/4W
Q322 DTC144ES COMP SW
C336 82p CH
R326 220
R390 22k
Q338 DTC144ES SW
Q323 DTC144ES
IC301 TA7193P
R-Y DEM
MTRX
B-Y DEM
CW OSC
PAL SW
COL CONT
Phase CONT
F.F
ACC DET
KILLER AMP
ID KILLER
ACC AMP
APC DET
ID AMP
B.P.A Burst Gate
R348 2.2k
R347 2.2k
C352 4700p B
C322 0.47 50V
R349 1k
R350 4.7k
R351 2.2k
C321 47 25V
R352 330k
C351 100p B
R345 820
R346 820
R344 8.2k
R342 1.2k
C315 4.7 50V
R343 82k
C319 0.01 F
C318 0.1 50V :MPS
C320 1 50V
R340 27k
R341 27k
C317 0.047 50V :MPS
C316 0.047 50V :MPS
R353 8.2k
R354 3.9k
SHARPNESS COMPONENT SEL OUT
B-Y,R-Y SIRCS
B/O
PIC,BRT IN,OUT
Q331 2SA1175 R-Y. AMP1
Q333 2SC2785 R-Y. AMP3
R406 470
R408 820
R410 100
R407 470
R409 330
R411 2.7k
Q332 2SC2785 R-Y. AMP2
Q328 2SA1175 B-Y. AMP1
Q330 2SC2785 B-Y. AMP3
R400 470
R402 820
R404 100
R401 470
R403 330
R405 2.7k
Q329 2SC2785 B-Y. AMP2
R414 10k
Q334 2SA1175 VOLT-REF
C338 47 25V
C498 2.2 50V
C486 0.01 F
C485 100 25V
RV006 10k-B
B-Y
C341 47 25V
C339 47 25V
RV007 10k-B
R-Y
C340 47 25V
D307 1SS148
R412 1.5k
R413 1k
C427 100 25V
IC306 AN5613
R.G.B Matrix
Pedestal Clamp
Pedestal Control
G-Y Color Matrix Control
Picture
R355 27k
Q310 2SC2785 COL-KILLER
C350 56p
R357 47k
R807 47k
R356 47k
D302 1SS148 SW
Q410 DTC144ES BURST-MUTE
R358 22k
R399 2.7k 1/4W
R431 820
R432 560
R430 680 1/4W
TP43
IC302 ACC
C IN
E
12V
ACC OUT
12V
BURST GATE
E
12V
BURST OUT
BIAS
12V
ACC ADJ
E
R327 1k
R359 1k
C313 1000p B
C314 1000p B
IC311 LA7016 COL-KILLER
R337 270
R335 100 1/4W
R333 33k
C475 0.01 F
Q309 2SC2785 CHROMA-BUFF
R336 1k
R334 18k
C479 100 25V
C312 10 50V
R338 2.2k
RV002 4.7k-B
ACC
R339 100
Q318 2SC2785 Y-BUFF
IN
OUT
R373 39k
C493 0.01 F
R442 100 1/4W
C328 47 25V :ALB
R378 22k
R375 100
R374 18k
R376 1k
R377 8.2k
R379 12k
D308 1SS148
C309 4700p B
C310 4700p B
IC312 LA7016 CHROMA-SW
R332 100
C311 0.0047 B
R329 22k
R328 27k
R330 22k
C329 47 25V
IC304 SHARPNESS MODULE
GND
12V
Out put
Control
In put
Peaking
IC303 NJM2243S
R369 100
C307 47 25V
Q311 DTC144ES SECAM-SW
C473 100 25V
C308 47 25V
R331 22k
C474 0.01 F
C494 220 25V
R434 4.7k
L304 5.6μH FLR-50
C332 82p CH
R382 180
R498 22k
R499 22k
R491 1.8k
Q406 2SC2785 Y-BUFF1
Q308 2SC2785 SY-AMP3
Q307 2SA1175 SY-AMP2
Q306 2SC2785 SY-AMP1
R325 100
R322 220
R320 680
R318 2.7k
C482 100 25V
C481 0.01 F
C480 0.01 F
R314 100
R311 33k
R313 100
R436 3.3k
R435
R380 150
R383 470
R385 330
R388 3.3k
C477 0.047 F
R393 68
Q327 2SC2785 Y-AMP2
C330 47p CH
R438 100
Q326 2SC2785 Y-AMP1
C337 47 25V
R384 470
R386 680
R387 100
R394 220
R395 1k
Q319 2SC2785 Y-AMP1
Q320 2SA1175 Y-AMP2
Q321 2SA1175 Y-AMP3
IC307 BLUE-ONLY
Fil
Vcc
B in
G in
R in
B-SW
NC
Vcc
GND
B out
G out
R out
GND
R363 1k
R362 270
C349 220 25V
Q403 2SA1175 BRT-SHIFT
C348 0.01 F
R482 22k
R483 22k
R484
C347 10 50V
R446 2.7k
C404 0.22 50V :MPS
C405 0.22 50V :MPS
C406 0.22 50V :MPS
R451 220 1/4W
R452 220
R453 220 1/4W
R450 220
R465 47k 1/4W
R454 1k
C407 0.22 50V
R455 220
C408 0.22 50V
R459
C402 0.1 50V :MPS
C403 0.1 50V :MPS
VREF1
VREF2
YM
YS
LIN R
LIN G
LIN B
CIN/DIG
TV/RGB
DR
DG
DB
ON R
ON G
ON B
NC
TV R
RCU
GCL
(1)
(2)
(3)
(4)
(5)
(6)
(7)
(8)
(9)
(10)
(11)
(12)
(13)
(14)
(15)
(16)
(17)
(18)
(19)
(20)
(22)
(23)
(24)
(25)
(26)
(27)
(28)
(29)
-H
DD
GND
SW
BLK
PLS
IN
D-H
M-H
AM)
AM)
GND
B-H
-Y)
-Y)
PLS
GND
OUT
IN
ONT
(H)
ACC
GND
ACC
GND
-IN
-SW
OUT
GND
-IN
VCC
E IN

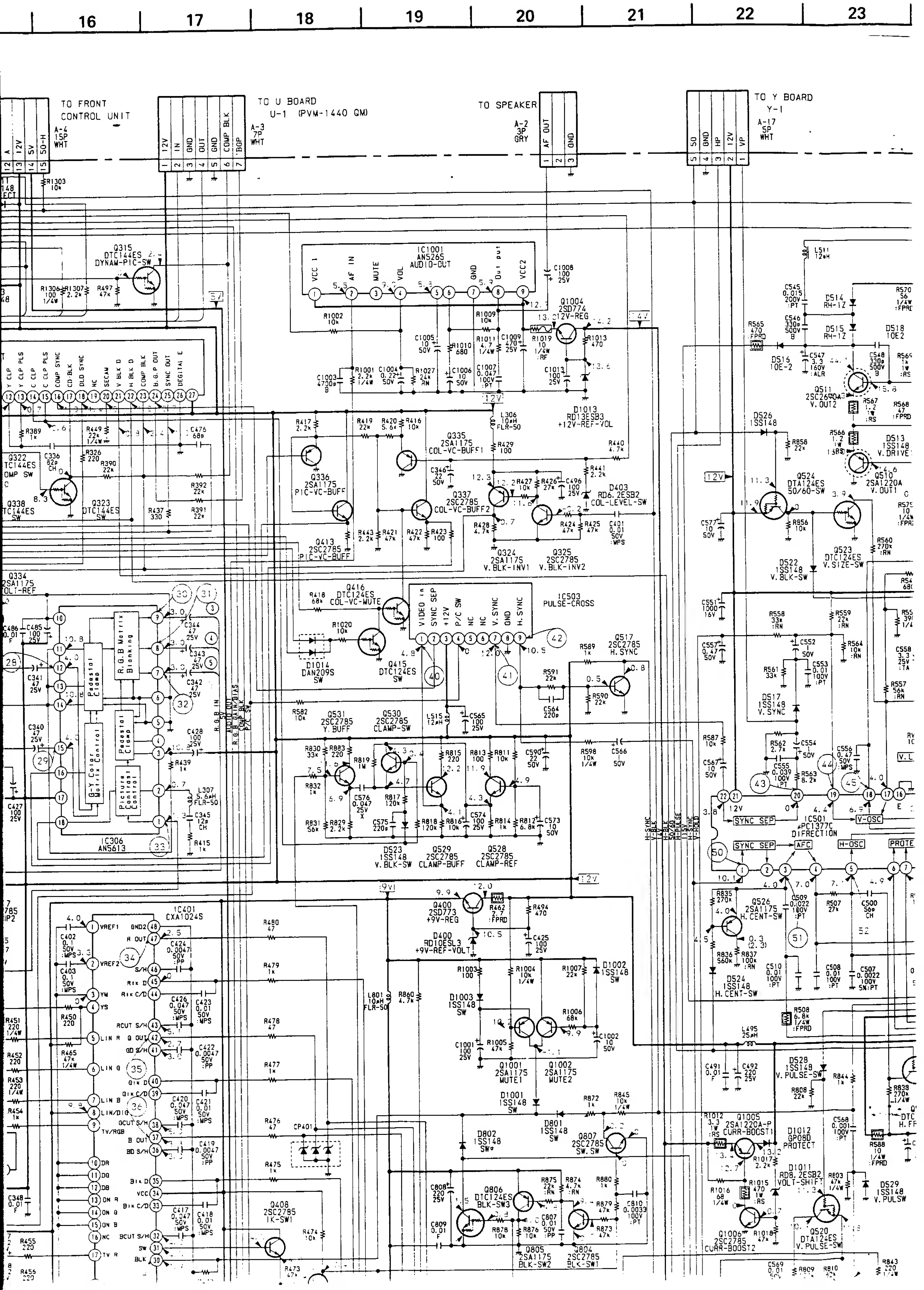
16
17
18
19
20
21
22
23
TO FRONT CONTROL UNIT
A-4 15P WHT
TO U BOARD U-1 (PVM-1440 QM)
A-3 7P WHT
12V
IN
GND
OUT
GND
COMP BLK
BGP
TO SPEAKER
A-2 3P GRY
AF OUT
GND
TO Y BOARD Y-1
A-17 5P WHT
50
GND
HP
12V
VP
R1303 10k
Q315 DTC144ES DYNAM-PIC-SW
IC1001 AN5265 AUDIO-OUT
VCC 1
AF IN
MUTE
VOL
GND
Out put
VCC2
C1008 100 25V
Q1004 2SD774 12V-REG
D1013 RD13ESB3 +12V-REF-VOL
R1002 10k
R1009 10k
R1010 680
R1011 4.7 1/4W
R1019 10 1/4W :RF
R1013 470
C1009 470 25V
C1005 10 50V
C1006 10 50V
C1007 0.047 100V :PT
C1013 100 25V
R1001 2.2k 1/4W
C1004 0.22 50V
R1027 24k :RN
C1003 4700p B
L306 10µH FLR-50
Q335 2SA1175 COL-VC-BUFF1
Q336 2SA1175 PIC-VC-BUFF
Q337 2SC2785 COL-VC-BUFF2
Q413 2SC2785 PIC-VC-BUFF
Q324 2SA1175 V.BLK-INV1
Q325 2SC2785 V.BLK-INV2
D403 RD6.2ESB2 COL-LEVEL-SW
Q322 DTC144ES COMP SW
Q323 DTC144ES SW
Q338 DTC144ES SW
Q334 2SA1175 VOLT-REF
Q416 DTC124ES COL-VC-MUTE
Q415 DTC124ES SW
D1014 DAN209S SW
IC503 PULSE-CROSS
VIDEO In
SYNC SEP
+12V
P/C SW
NC
NC
V.SYNC
GND
H.SYNC
Q517 2SC2785 H.SYNC
IC306 AN5613
R.G.B Matrix Blanking
Pedestal Clamp
Pedestal Clamp
B-Y Color Matrix Control
Picture Control Control
L307 5.6µH FLR-50
R.G.B IN
AUDIO OUT
R.G.B GAIN/BIAS
COMP BLK
P/C SW
Q531 2SC2785 Y.BUFF
Q530 2SC2785 CLAMP-SW
L515 12µH
D523 1SS148 V.BLK-SW
Q529 2SC2785 CLAMP-BUFF
Q528 2SC2785 CLAMP-REF
IC401 CXA1024S
VREF1
VREF2
GND2
R OUT
R S/H
Rik D
Rik C/D
YM
YS
LIN R
RCUT S/H
G OUT
GD S/H
LIN G
Gik D
Gik C/D
LIN B
LIN/DIG
TV/RGB
GCUT S/H
B OUT
BD S/H
DR
DG
DB
ON R
ON G
ON B
NC
TV R
Bik D
VCC
Bik C/D
BCUT S/H
SW
BLK
Q400 2SD773 +9V-REG
D400 RD10ESL3 +9V-REF-VOLT
L801 10µH FLR-50
Q1001 2SA1175 MUTE1
Q1002 2SA1175 MUTE2
D1001 1SS148 SW
D1002 1SS148 SW
D1003 1SS148 SW
CP401
Q408 2SC2785 IK-SW1
D802 1SS148 SW
D801 1SS148 SW
Q807 2SC2785 SW.SW
Q806 DTC124ES BLK-SW3
Q805 2SA1175 BLK-SW2
Q804 2SC2785 BLK-SW1
H-SYNC
V-BLK
H-BLK
50/60
H-PULSE
115V
V-SYNC
V-HOLD
L511 12µH
D514 RH-1Z
D515 RH-1Z
D516 10E-2
D518 10E2
Q511 2SC2690A V.OUT2
Q510 2SA1220A V.OUT1
D513 1SS148 V.DRIVE
D526 1SS148
Q524 DTA124ES 50/60-SW
Q523 DTC124ES V.SIZE-SW
D522 1SS148 V.BLK-SW
D517 1SS148 V.SYNC
IC501 µPC1377C DIRECTION
SYNC SEP
V-OSC
AFC
H-OSC
PROTE
Q526 2SA1175 H.CENT-SW
D524 1SS148 H.CENT-SW
L495 25µH
D528 1SS148 V.PULSE-SW
Q1005 2SA1220A-P CURR-BOOST1
D1012 GP08D PROTECT
D1011 RD8.2ESB2 VOLT-SHIFT
Q1006 2SC2785 CURR-BOOST2
Q520 DTA124ES V.PULSE-SW
D529 1SS148 V.PULSW

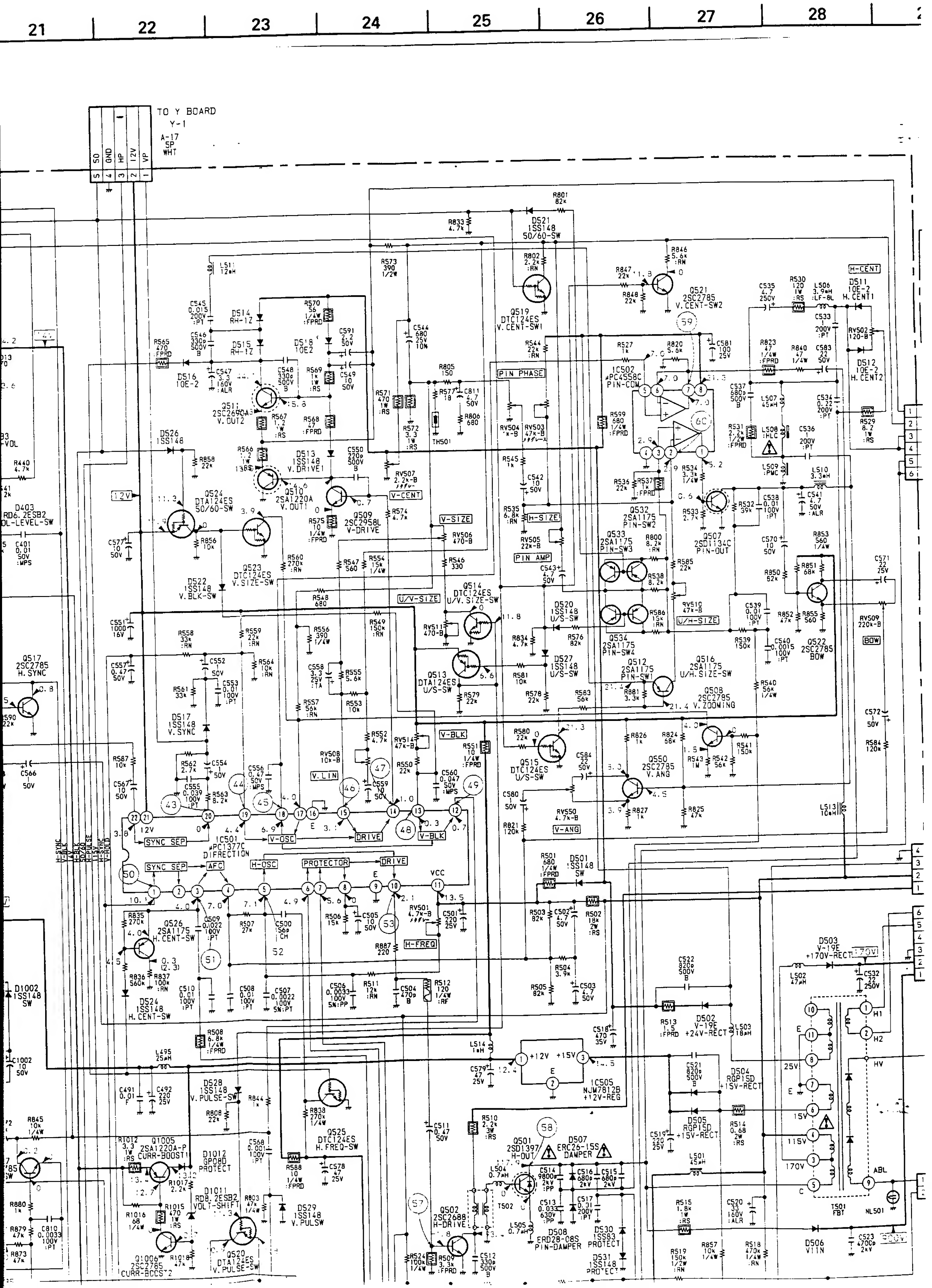
21
22
23
24
25
26
27
28
TO Y BOARD
Y-1
A-17
5P
WHT
SO
GND
HP
12V
VP
IC501
μPC1377C
DIRECTION
SYNC SEP
AFC
H-OSC
PROTECTOR
DRIVE
V-OSC
V-BLK
V.LIN
V-SIZE
V-CENT
U/V-SIZE
U/H-SIZE
PIN PHASE
H-SIZE
PIN AMP
H-CENT
H-FREQ
V-ANG
BOW
IC502
μPC4558C
PIN-COM
IC505
NJM7812B
+12V-REG
+12V
+15V
Q501
2SD1397
H-OUT
Q502
2SC2688
H-DRIVE
Q507
2SD1134C
PIN-OUT
Q509
2SC2958L
V-DRIVE
Q510
2SA1220A
V.OUT1
Q511
2SC2690A
V.OUT2
Q513
DTA124ES
U/S-SW
Q514
DTC124ES
U/V.SIZE-SW
Q515
DTC124ES
U/S-SW
Q516
2SA1175
U/H.SIZE-SW
Q517
2SC2785
H.SYNC
Q519
DTC124ES
V.CENT-SW1
Q521
2SC2785
V.CENT-SW2
Q522
2SC2785
BOW
Q523
DTC124ES
V.SIZE-SW
Q524
DTA124ES
50/60-SW
Q525
DTC124ES
H.FREQ-SW
Q526
2SA1175
H.CENT-SW
Q532
2SA1175
PIN-SW2
Q533
2SA1175
PIN-SW3
Q534
2SA1175
PIN-SW4
Q512
2SA1175
PIN-SW1
Q508
2SC2785
V.ZOOMING
Q550
2SC2785
V.ANG
Q1005
2SA1220A-P
CURR-BOOST1
Q1006
2SC2785
CURR-BOOST2
Q520
DTA124ES
V.PULSE-SW
D501
1SS148
SW
D502
V-19E
+24V-RECT
D503
V-19E
+170V-RECT
170V
D504
RGP15D
+15V-RECT
D505
RGP15D
+15V-RECT
D506
V11N
D507
ERC26-15S
DAMPER
D508
ERD28-08S
PIN-DAMPER
D511
10E-2
H.CENT1
D512
10E-2
H.CENT2
D513
1SS148
V.DRIVE1
D514
RH-1Z
D515
RH-1Z
D516
10E-2
D517
1SS148
V.SYNC
D518
10E2
D520
1SS148
U/S-SW
D521
1SS148
50/60-SW
D522
1SS148
V.BLK-SW
D524
1SS148
H.CENT-SW
D526
1SS148
D527
1SS148
U/S-SW
D528
1SS148
V.PULSE-SW
D529
1SS148
V.PULSW
D530
1SS83
PROTECT
D531
1SS148
PROTECT
D403
RD6.2ESB2
VOL-LEVEL-SW
D1002
1SS148
SW
D1011
RD8.2ESB2
VOLT-SHIFT
D1012
GP08D
PROTECT
T501
FBT
T502
NL501
TH501
HV
ABL
H1
H2
E
25V
15V
115V
C
43
44
45
46
47
48
49
50
51
52
53
57
58
59
60

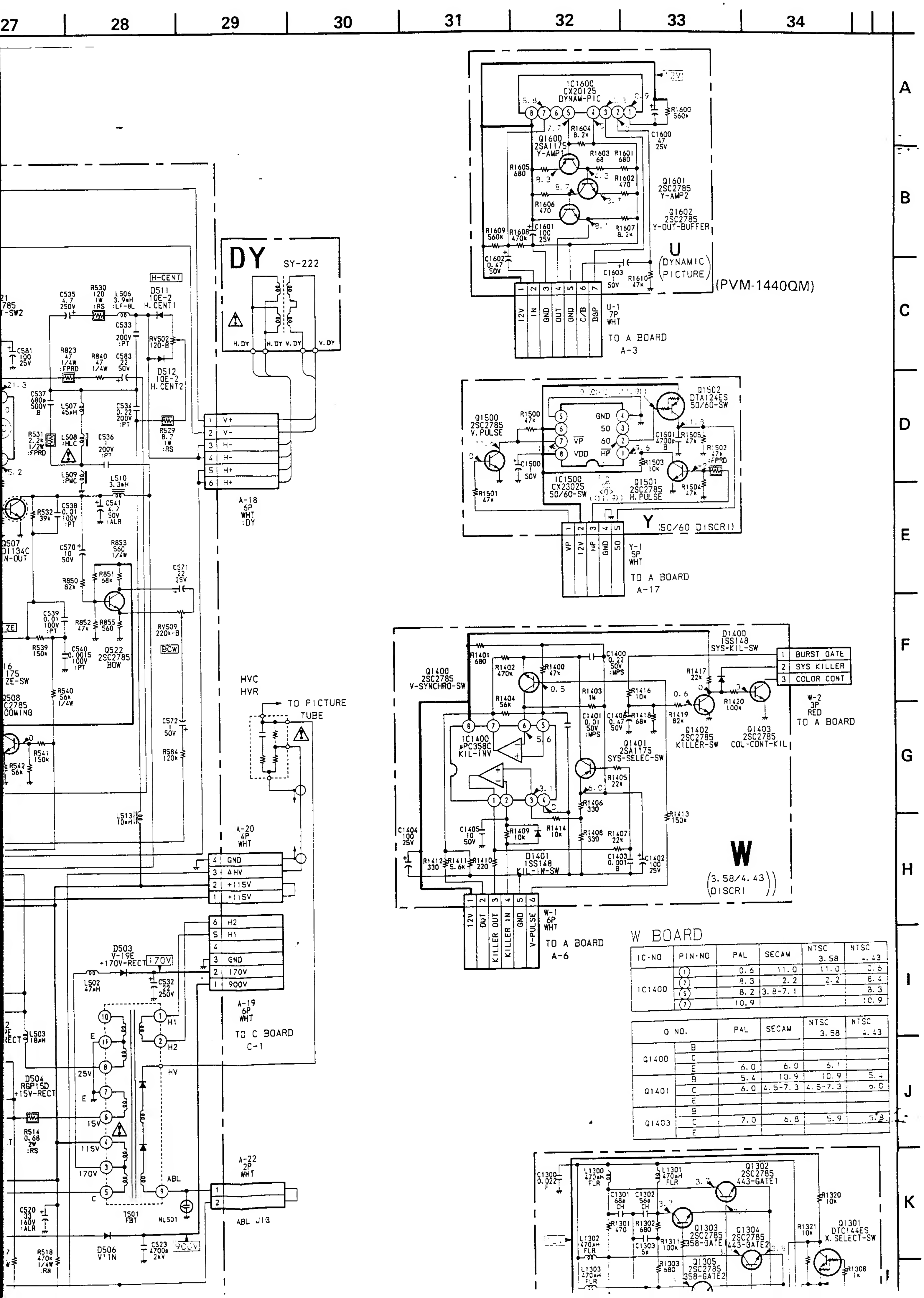
27
28
29
30
31
32
33
34
A
B
C
D
E
F
G
H
I
J
K
IC1600
CX20125
DYNAM-PIC
Q1600
2SA1175
Y-AMP1
Q1601
2SC2785
Y-AMP2
Q1602
2SC2785
Y-OUT-BUFFER
R1600 560k
C1600 47 25V
R1604 8.2k
R1603 68
R1601 680
R1602 470
R1605 680
R1606 470
R1607 8.2k
R1609 560k
R1608 470k
C1601 100 25V
C1602 0.47 50V
C1603 1 50V
R1610 47k
U
DYNAMIC PICTURE
(PVM-1440QM)
12V
IN
GND
OUT
GND
C/B
BGP
U-1
7P
WHT
TO A BOARD
A-3
DY
SY-222
H.DY
H.DY V.DY
V.DY
Q1502
DTA124ES
50/60-SW
Q1500
2SC2785
V.PULSE
R1500 47k
GND
50
60
VP
VDD
HP
C1500 1 50V
C1501 4700p B
R1505 47k
R1502 47k :FPRD
R1503 10k
R1504 47k
R1501 47k
IC1500
CX23025
50/60-SW
Q1501
2SC2785
H.PULSE
Y
(50/60 DISCRI)
VP
12V
HP
GND
50
Y-1
5P
WHT
TO A BOARD
A-17
D1400
1SS148
SYS-KIL-SW
Q1400
2SC2785
V-SYNCHRO-SW
R1401 680
R1402 470k
R1400 47k
C1400 0.22 50V :MPS
R1403 1M
R1404 56k
R1416 10k
R1417 22k
R1418 68k
R1419 82k
R1420 100k
C1401 0.01 50V :MPS
C1406 0.47 50V
IC1400
μPC358C
KIL-INV
Q1401
2SA1175
SYS-SELEC-SW
Q1402
2SC2785
KILLER-SW
Q1403
2SC2785
COL-CONT-KIL
R1405 22k
R1406 330
R1408 330
R1407 22k
R1413 150k
R1409 10k
R1414 10k
C1404 100 25V
C1405 10 50V
R1412 330
R1411 5.6k
R1410 220
D1401
1SS148
KIL-IN-SW
C1403 0.001 B
C1402 100 25V
W
(3.58/4.43 DISCRI)
BURST GATE
SYS KILLER
COLOR CONT
W-2
3P
RED
TO A BOARD
12V
OUT
KILLER OUT
KILLER IN
GND
V-PULSE
W-1
6P
WHT
TO A BOARD
A-6
H-CENT
C535 4.7 250V
R530 120 1W :RS
L506 3.9mH :LF-8L
D511 10E-2 H.CENT1
C533 1 200V :PT
RV502 120-B
D512 10E-2 H.CENT2
R823 47 1/4W :FPRD
R840 47 1/4W
C583 22 50V
C581 100 25V
C537 680p 500V B
L507 45μH
C534 0.22 200V :PT
R529 8.2 1W :RS
R531 2.2k 1/2W :FPRD
L508 :HLC
C536 1 200V :PT
L509 :PMC
L510 3.3mH
R532 39k
C538 0.01 100V :PT
C541 4.7 50V :ALR
C570 10 50V
R853 560 1/4W
C571 22 25V
R850 82k
R851 68k
C539 0.01 100V :PT
R852 47k
R855 560
RV509 220k-B
BOW
R539 150k
C540 0.0015 100V :PT
Q522 2SC2785 BOW
R540 56k 1/4W
C572 1 50V
R584 120k
R541 150k
R542 56k
L513 10mH
V+
V-
H-
H-
H+
H+
A-18
6P
WHT
:DY
HVC
HVR
TO PICTURE TUBE
A-20
4P
WHT
GND
ΔHV
+115V
+115V
H2
H1
GND
170V
900V
A-19
6P
WHT
TO C BOARD
C-1
D503
V-19E
+170V-RECT
170V
L502 47μH
C532 22 250V
L503 18μH
D504
RGP15D
+15V-RECT
R514 0.68 2W :RS
25V
15V
115V
170V
E
C
H1
H2
HV
ABL
T501 FBT
NL501
A-22
2P
WHT
ABL JIG
C520 33 160V :ALR
R518 470k 1/4W :RN
D506 V'1N
C523 4700p 2kV
900V
C1300 0.022 F
L1300 470μH FLR
L1301 470μH FLR
Q1302
2SC2785
443-GATE1
C1301 68p CH
C1302 56p CH
R1320 10k
R1301 470
R1302 680
Q1303
2SC2785
358-GATE
Q1304
2SC2785
443-GATE2
Q1301
DTC144ES
X.SELECT-SW
R1321 10k
L1302 470μH FLR
C1303 5p
R1311 100k
R1303 680
Q1305
2SC2785
358-GATE2
R1308 1k
L1303 470μH FLR
Q507
D1134C
N-OUT
Q508
2SC2785
ZOOMING
ZE-SW

W BOARD

IC·NO	PIN·NO	PAL	SECAM	NTSC 3.58	NTSC 4.43
IC1400	①	0.6	11.0	11.0	0.6
	②	8.3	2.2	2.2	8.4
	⑤	8.2	3.8-7.1		8.3
	⑦	10.9			10.9

Q NO.		PAL	SECAM	NTSC 3.58	NTSC 4.43
Q1400	B				
	C				
	E	6.0	6.0	6.1	
Q1401	B	5.4	10.9	10.9	5.4
	C	6.0	4.5-7.3	4.5-7.3	6.0
	E				
Q1403	B				
	C	7.0	6.8	5.9	5.3
	E				

Note :

- All capacitors are in μF unless otherwise noted. pF : μμF 50 WV or less are not indicated except for electrolytics.
- Indication of resistance, which does not have one for rating electrical power, is as follows.

Pitch : 5 mm
Rating electrical power 1/4W

- All resistors are in ohms.
- ▭ : nonflammable resistor.
- ⏛ : fusible resistor.
- △ : internal component.
- ▭ : panel designation and adjustment for repair.
- All variable and adjustable resistors have characteristic curve B, unless otherwise noted.
- When replacing the part in below table be sure to perform the related adjustment.

Part replaced	Adjustment (※)
IC501, Q503, Q504, Q505, Q506, D509, D510, C505, C520, C524, C525, C526, C527, C528, C529, C530, C531, R500, R506, R516, R517, R518, R519, R520, R521, R522, R523, R524, R525, R526, R528, R804, NL501, HVR	R500 (HOLD-DOWN)

- All voltages are in V.
- Voltage are dc with respect to ground unless otherwise noted.
- Readings are taken with a color-bar signal input.
- Readings are taken with a PAL color-bar signal input.
- Voltage variations may be noted due to normal production tolerance.
- ▬▬ : B+ bus.
- ▬ ▬ ▬ : B− bus.
- ░░░ : signal path.
- No mark : with PAL color-bar signal received or common voltage.
- ( ) : with SECAM color-bar signal received.
- < > : with NTSC 3.58 color-bar signal received.
- << >> : with NTSC 4.43 color-bar signal received.
- [ ] : with S (Y/C) color-bar signal received.
- { } : with disital (9 pin in) color-bar signal received.
- ※ : measurement impossibility.

Reference information

RESISTOR	: RN	METAL FILM
	: RC	SOLID
	: FPRD	NONFLAMMABLE CARBON
	: FUSE	NONFLAMMABLE FUSIBLE
	: RS	NONFLAMMABLE WIREWOUND
	: RB	NONFLAMMABLE CEMENT
COIL	: LF-8L	MICRO INDUCTOR
CAPACITOR	: TA	TANTALUM
	: PS	STYROL
	: PP	POLYPROPYLENE
	: PT	MYLAR
	: MPS	METALIZED POLYESTER
	: MPP	METALIZED POLYPROPYLENE
	: ALB	BIPOLAR
	: ALT	HIGH TEMPERATURE
	: ALR	HIGH RIPPLE

Note: The components identified by shading and mark ⚠ are critical for safety. Replace only with part number specified.

IC301	[illegible]	[illegible]	[illegible]	[illegible]	[illegible]	[illegible]	[illegible]
	[illegible]	8.4	2.2	[illegible]	[illegible]	8.4	2.2
	[illegible]	6.5	[illegible]	6.5	6.5	6.5	[illegible]
IC302	[illegible]	[illegible]	[illegible]	[illegible]	[illegible]	1.4	2.5
IC303	(7)	0	0	0	[illegible]	3.8	6.4
IC304	[illegible]	0	2.8	2.8	2.8	2.4	2.4
IC305	(3)	7.0	10.2	7.0	7.[illegible]	7.0	[illegible]
	(4)	6.4	9.[illegible]	6.4	6.4		
	(5)	6.9	10.2	6.9	6.9	5.9	[illegible]
	(6)	6.3	9.8	6.4	6.4	6.4	6.4
	(9)(10)	6.8	10.0	6.8	6.8		
IC306	[illegible]	7.9	4.5	9.4	[illegible]	6.1	[illegible]
	[illegible]	6.4	6.3	6.3	[illegible]	[illegible]	[illegible]
IC309	(1)	1.1	1.7	3.0	1.8	1.5	
	(3)	9.1	10.5	9.1	9.1	9.1	
	(4)	9.1	8.9	9.1	9.1	9.1	
	(10)	12.3	0.1	12.3	12.3	12.3	
	(13)	9.1	10.5	9.1			
IC311	(3)	4.3	0	4.3	4.3	4.3	0
	(4)	7.3	7.3	7.3	7.3	7.3	8.0
IC312	(3)	0	0	0	0	4.9	0.5
IC401	(4)	2.8	0.9	0.9	0.9	0.9	1.1
	(5)(6)(7)	0.9	4.4	4.4	4.4	4.4	4.8
	(9)	4.4	5.3	5.3	5.3	5.3	0
	(17)(18)(19)	5.3	6.0	6.0	6.0	6.0	5.1
	(20)	6.0	5.7	5.6	3.6	2.6	2.6
	(33)	4.3	1.0	1.2	0.8	0.6	0.6
	(35)	0.7	0.2	0.3	0	0	0
	(39)	0.4	0.8	1.1	0.7	0.7	0.7
	(40)	0.5	0.2	0.3	0	0	0
	(44)	0.3	1.0	0.7	0.6	0.6	0.6
	(46)	0.5	3.1	3.2	3.1	3.0	3.0
IC503	(2)	2.9	1.0	1.0	1.0	1.0	1.6

Q NO.		PAL	SECAM	NTSC 3.58	NTSC 4.43	S-VIDEO	DIGITAL
Q310	B	4.3	0	4.3	4.3		
	C	0.2	0	0.2	0.2		
	E						
Q316	B	0	0.2	0.3	0	0	0
	C						
	E						
Q317	B	0	11.7	0.3	0	0.3	0
	C	12.3	0.1	12.3	12.3	12.3	12.3
	E						
Q322	B						
	C	0	0.2	0.3	0	0	0
	E						
Q323	B	0	0.2	0.3	0	0	0
	C						
	E						
Q328	B	9.1	10.5	9.1	9.1		
	C	2.5	1.2	2.5	2.5		
	E	9.8	11.0	9.8	9.8		
Q329	B	2.5	1.2	2.5	2.5		
	C	7.6	10.8	7.6	7.6		
	E	1.9	0.6	1.9	1.9		
Q330	B	7.6	10.8	7.6	7.6		
	C	12.1	11.9	12.1	12.1		
	E	7.0	10.2	7.0	7.0		
Q331	B	9.1	10.5	9.1	9.1		
	C	2.6	1.2	2.6	2.6		
	E	9.8	11.1	9.8	9.8		
Q332	B	2.6	1.2	2.6	2.6		
	C	7.5	10.5	[illegible]	[illegible]		
	E	1.9	0.6	[illegible]	[illegible]		
Q333	B	7.5	10.6	[illegible]	[illegible]		
	C	12.1	11.9	[illegible]	[illegible]		
	E	6.9	10.9	[illegible]	[illegible]		
Q335	B	6.8	6.2	5.4	5.4		
	C						
	E	7.4	[illegible]	6.0	6.0		
Q336	B	9.0	9.5	[illegible]	9.7		
	C						
	E	9.6	[illegible]	10.4	[illegible]		
Q337	B	[illegible]	6.8	[illegible]	[illegible]		
	C						
	E	6.4	[illegible]	[illegible]	[illegible]		
Q401	B						
	C	7.9	[illegible]	[illegible]	[illegible]		[illegible]
	E						
Q404	B						
	C	7.6	[illegible]	[illegible]	[illegible]		[illegible]
	E	0.3	0.4	[illegible]	[illegible]	[illegible]	[illegible]
Q405	B						
	C	[illegible]	[illegible]	4.3	[illegible]		[illegible]
	E	0.3	[illegible]	[illegible]	[illegible]	[illegible]	
Q407	B	[illegible]	[illegible]	[illegible]	[illegible]		[illegible]
	C						
	E	[illegible]	[illegible]	[illegible]	[illegible]		[illegible]
Q411	B	[illegible]	[illegible]				
	C	[illegible]	[illegible]	[illegible]	[illegible]		
	E						
Q413	B	6.6	[illegible]	[illegible]	[illegible]		
	C						
	E	[illegible]	[illegible]	[illegible]	[illegible]	[illegible]	[illegible]
Q415	B	[illegible]	[illegible]	[illegible]	[illegible]		
	C	[illegible]	[illegible]	[illegible]	[illegible]		
	E						
Q416	B	[illegible]	[illegible]	[illegible]	[illegible]		
	C	[illegible]	[illegible]	[illegible]	[illegible]		
	E						
Q507	B						
	C	[illegible]	[illegible]	[illegible]	[illegible]		
	E						
[illegible]	B						
	C	[illegible]	[illegible]	[illegible]	[illegible]		
	E						
Q532	B	[illegible]	[illegible]	[illegible]	[illegible]		
	C	[illegible]	[illegible]	[illegible]	[illegible]		
	E	[illegible]	[illegible]	[illegible]	[illegible]		
[illegible]	B	[illegible]	[illegible]	[illegible]	[illegible]		
	C						
	E	[illegible]	[illegible]	[illegible]	[illegible]		

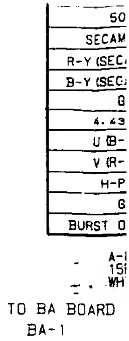

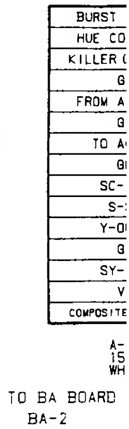

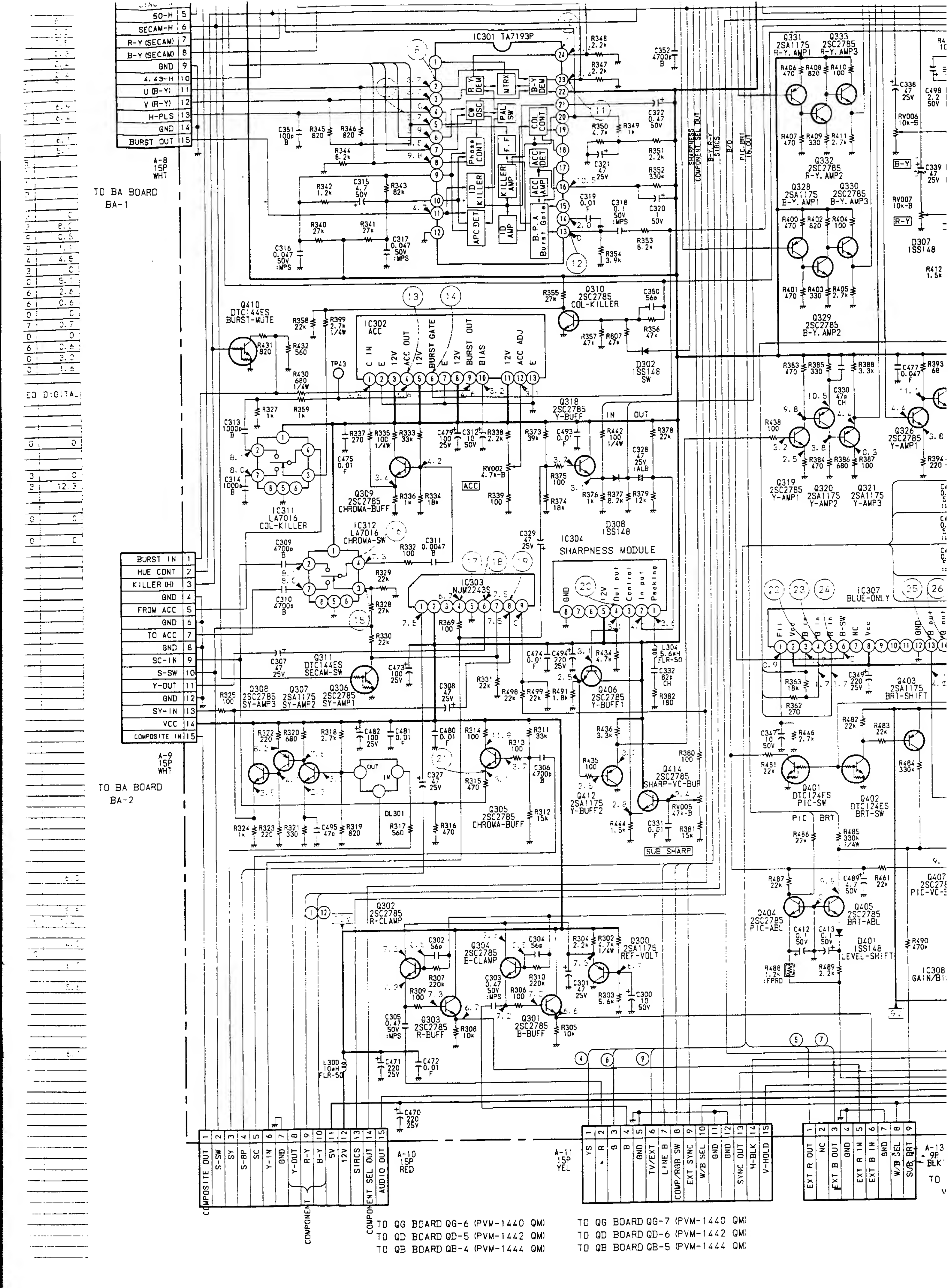
IC301 TA7193P
R-Y DEM
MTRX
B-Y DEM
CW OSC
PAL SW
COL CONT
Phase CONT
F.F
ACC DET
ID KILLER
KILLER AMP
ACC AMP
APC DET
ID AMP
B.P.A Burst Gate
50-H
SECAM-H
R-Y (SECAM)
B-Y (SECAM)
GND
4.43-H
U (B-Y)
V (R-Y)
H-PLS
BURST OUT
A-8 15P WHT
TO BA BOARD BA-1
Q410 DTC144ES BURST-MUTE
IC302 ACC
C IN
ACC OUT
BURST GATE
BURST OUT
BIAS
ACC ADJ
TP43
Q310 2SC2785 COL-KILLER
D302 1SS148 SW
IC311 LA7016 COL-KILLER
Q309 2SC2785 CHROMA-BUFF
RV002 4.7k-B
ACC
Q318 2SC2785 Y-BUFF
IN
OUT
D308 1SS148
IC304 SHARPNESS MODULE
GND
Out put
Control
In put
Peaking
IC312 LA7016 CHROMA-SW
IC303 NJM2243S
L304 5.6μH FLR-50
Q311 DTC144ES SECAM-SW
Q308 2SC2785 SY-AMP3
Q307 2SA1175 SY-AMP2
Q306 2SC2785 SY-AMP1
Q406 2SC2785 Y-BUFF1
BURST IN
HUE CONT
KILLER (H)
FROM ACC
TO ACC
SC-IN
S-SW
Y-OUT
SY-IN
VCC
COMPOSITE IN
A-9 15P WHT
TO BA BOARD BA-2
DL301
Q305 2SC2785 CHROMA-BUFF
Q414 2SC2785 SHARP-VC-BUF
Q412 2SA1175 Y-BUFF2
RV005 47k-B
SUB SHARP
Q331 2SA1175 R-Y. AMP1
Q333 2SC2785 R-Y. AMP3
Q332 2SC2785 R-Y. AMP2
Q328 2SA1175 B-Y. AMP1
Q330 2SC2785 B-Y. AMP3
Q329 2SC2785 B-Y. AMP2
RV006 10k-B
RV007 10k-B
B-Y
R-Y
D307 1SS148
SHARPNESS
COMPONENT SEL OUT
B-Y, R-Y
SIRCS
B/O
PIC BRT IN/OUT
Q319 2SC2785 Y-AMP1
Q320 2SA1175 Y-AMP2
Q321 2SA1175 Y-AMP3
Q326 2SC2785 Y-AMP1
IC307 BLUE-ONLY
Q403 2SA1175 BRT-SHIFT
Q401 DTC124ES PIC-SW
Q402 DTC124ES BRT-SW
PIC
BRT
Q407 PIC-VC
Q404 2SC2785 PIC-ABL
Q405 2SC2785 BRT-ABL
D401 1SS148 LEVEL-SHIFT
IC308 GAIN/B
Q302 2SC2785 R-CLAMP
Q304 2SC2785 B-CLAMP
Q300 2SA1175 REF-VOLT
Q303 2SC2785 R-BUFF
Q301 2SC2785 B-BUFF
L300 10μH FLR-50
COMPOSITE OUT
S-SW
SY
S-BP
SC
Y-IN
GND
Y-OUT
R-Y
B-Y
5V
12V
SIRCS
COMPONENT SEL OUT
AUDIO OUT
COMPONENT
A-10 15P RED
A-11 15P YEL
YS
R
G
B
GND
TV/EXT
LINE B
COMP/RGB SW
EXT SYNC
W/B SEL
GND
SYNC OUT
H-BLK
V-HOLD
EXT R OUT
NC
EXT B OUT
GND
EXT R IN
EXT B IN
W/B SEL
SUB BRT
A-13 9P BLK
TO QG BOARD QG-6 (PVM-1440 QM)
TO QD BOARD QD-5 (PVM-1442 QM)
TO QB BOARD QB-4 (PVM-1444 QM)
TO QG BOARD QG-7 (PVM-1440 QM)
TO QD BOARD QD-6 (PVM-1442 QM)
TO QB BOARD QB-5 (PVM-1444 QM)

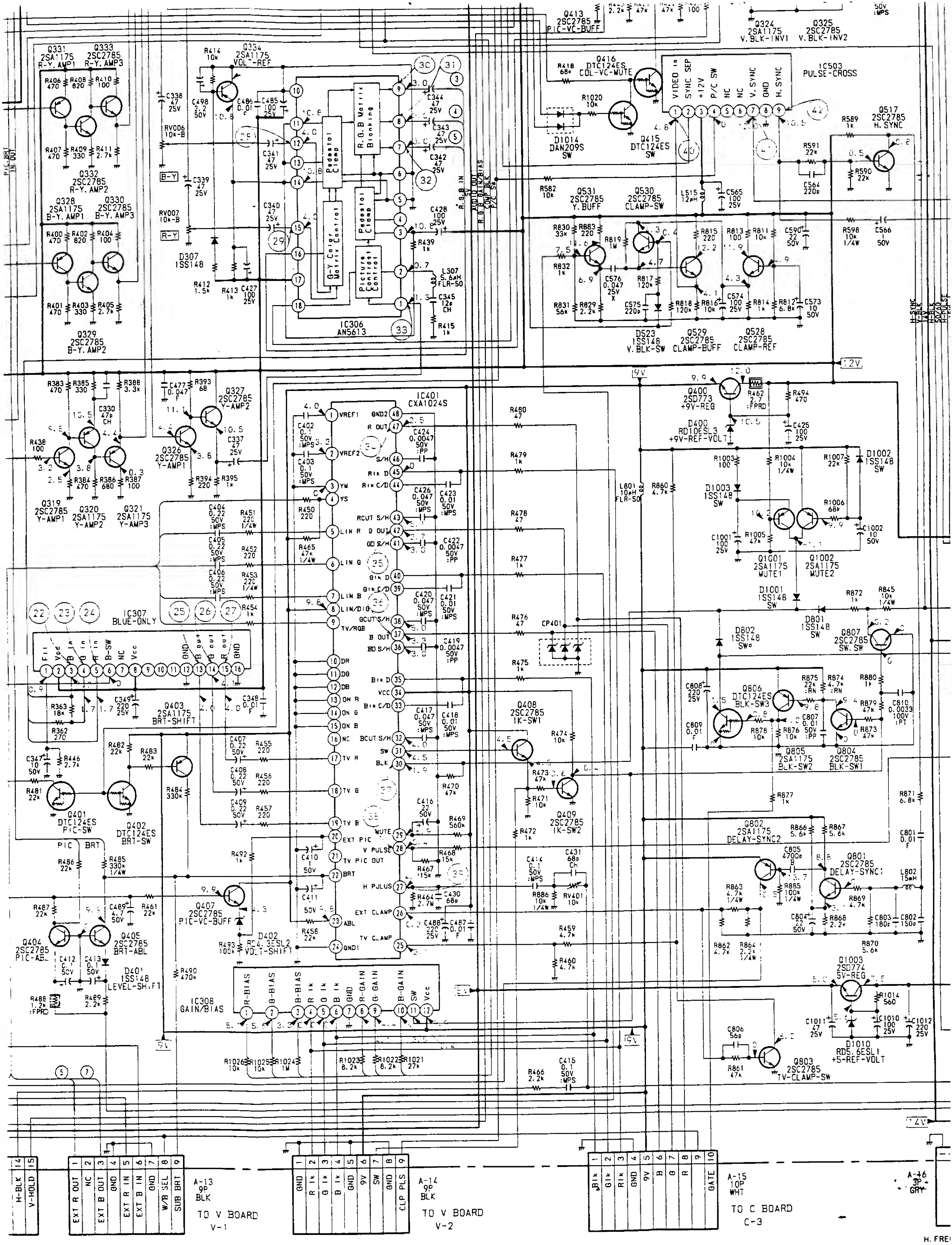

Q331 2SA1175 R-Y. AMP1
Q333 2SC2785 R-Y. AMP3
Q332 2SC2785 R-Y. AMP2
Q328 2SA1175 B-Y. AMP1
Q330 2SC2785 B-Y. AMP3
Q329 2SC2785 B-Y. AMP2
Q334 2SA1175 VOL'-REF
IC306 AN5613
R.G.B Matrix Blanking
Pedestal Clamp
G-Y Color Matrix Control
Picture Control
RV006 10k-B
RV007 10k-B
B-Y
R-Y
D307 1SS148
L307 5.6μH FLR-50
PIC.BRT IN OUT
R.G.B IN
AUDIO OUT
R.G.B GAIN/BIAS
COMP BLK
P/C SW
Q413 2SC2785 PIC-VC-BUFF
Q324 2SA1175 V.BLK-INV1
Q325 2SC2785 V.BLK-INV2
Q416 DTC124ES COL-VC-MUTE
Q415 DTC124ES SW
D1014 DAN209S SW
IC503 PULSE-CROSS
VIDEO In
SYNC SEP
+12V
P/C SW
NC
NC
V.SYNC
GND
H.SYNC
Q517 2SC2785 H.SYNC
Q531 2SC2785 Y.BUFF
Q530 2SC2785 CLAMP-SW
L515 12μH
D523 1SS148 V.BLK-SW
Q529 2SC2785 CLAMP-BUFF
Q528 2SC2785 CLAMP-REF
12V
9V
Q400 2SD773 +9V-REG
D400 RD10ESL3 +9V-REF-VOLT
Q327 2SC2785 Y-AMP2
Q326 2SC2785 Y-AMP1
Q319 2SC2785 Y-AMP1
Q320 2SA1175 Y-AMP2
Q321 2SA1175 Y-AMP3
IC401 CXA1024S
VREF1
VREF2
YM
YS
LIN R
LIN G
LIN B
LIN/DIG
TV/RGB
DR
DG
DB
ON R
ON G
ON B
NC
TV R
TV G
TV B
EXT PIC
TV PIC OUT
BRT
ABL
GND1
GND2
R OUT
S/H
Rik D
Rik C/D
RCUT S/H
G OUT
GD S/H
Gik D
Gik C/D
GCUT S/H
B OUT
BD S/H
Bik D
Vcc
Bik C/D
BCUT S/H
SW
BLK
MUTE
V PULSE
H PULUS
EXT CLAMP
TV CLAMP
IC307 BLUE-ONLY
Fil
Vcc
B in
R in
B-SW
NC
GND
G out
B out
R out
Q403 2SA1175 BRT-SHIFT
Q401 DTC124ES PIC-SW
Q402 DTC124ES BRT-SW
PIC BRT
Q407 2SC2785 PIC-VC-BUFF
Q404 2SC2785 PIC-ABL
Q405 2SC2785 BRT-ABL
D401 1SS148 LEVEL-SHIFT
D402 RD4.3ESL2 VOLT-SHIFT
IC308 GAIN/BIAS
R-BIAS
G-BIAS
B-BIAS
R Ik
G Ik
B Ik
GND
R-GAIN
G-GAIN
B-GAIN
SW
Vcc
CP401
Q408 2SC2785 IK-SW1
Q409 2SC2785 IK-SW2
RV401 10k
L801 10μH FLR-50
D1003 1SS148 SW
D1002 1SS148 SW
Q1001 2SA1175 MUTE1
Q1002 2SA1175 MUTE2
D1001 1SS148 SW
D801 1SS148 SW
D802 1SS148 SW
Q807 2SC2785 SW. SW
Q806 DTC124ES BLK-SW3
Q805 2SA1175 BLK-SW2
Q804 2SC2785 BLK-SW1
Q802 2SA1175 DELAY-SYNC2
Q801 2SC2785 DELAY-SYNC1
L802 15μH
Q1003 2SD774 5V-REG
D1010 RD5.6ESL1 +5-REF-VOLT
Q803 2SC2785 TV-CLAMP-SW
V-SYNC
V-BLK
+12V
H-BLK
SCAN
H-PULSE
H-BLK
V-HOLD
EXT R OUT
NC
EXT B OUT
EXT G OUT
EXT R IN
EXT B IN
GND
W/B SEL
SUB BRT
A-13 9P BLK
TO V BOARD V-1
GND
R Ik
G Ik
B Ik
GND
9V
SW
GND
CLP PLS
A-14 9P BLK
TO V BOARD V-2
B Ik
G Ik
R Ik
GND
9V
B
G
R
GATE
A-15 10P WHT
TO C BOARD C-3
A-46 3P GRY
H. FRE
50V :MPS

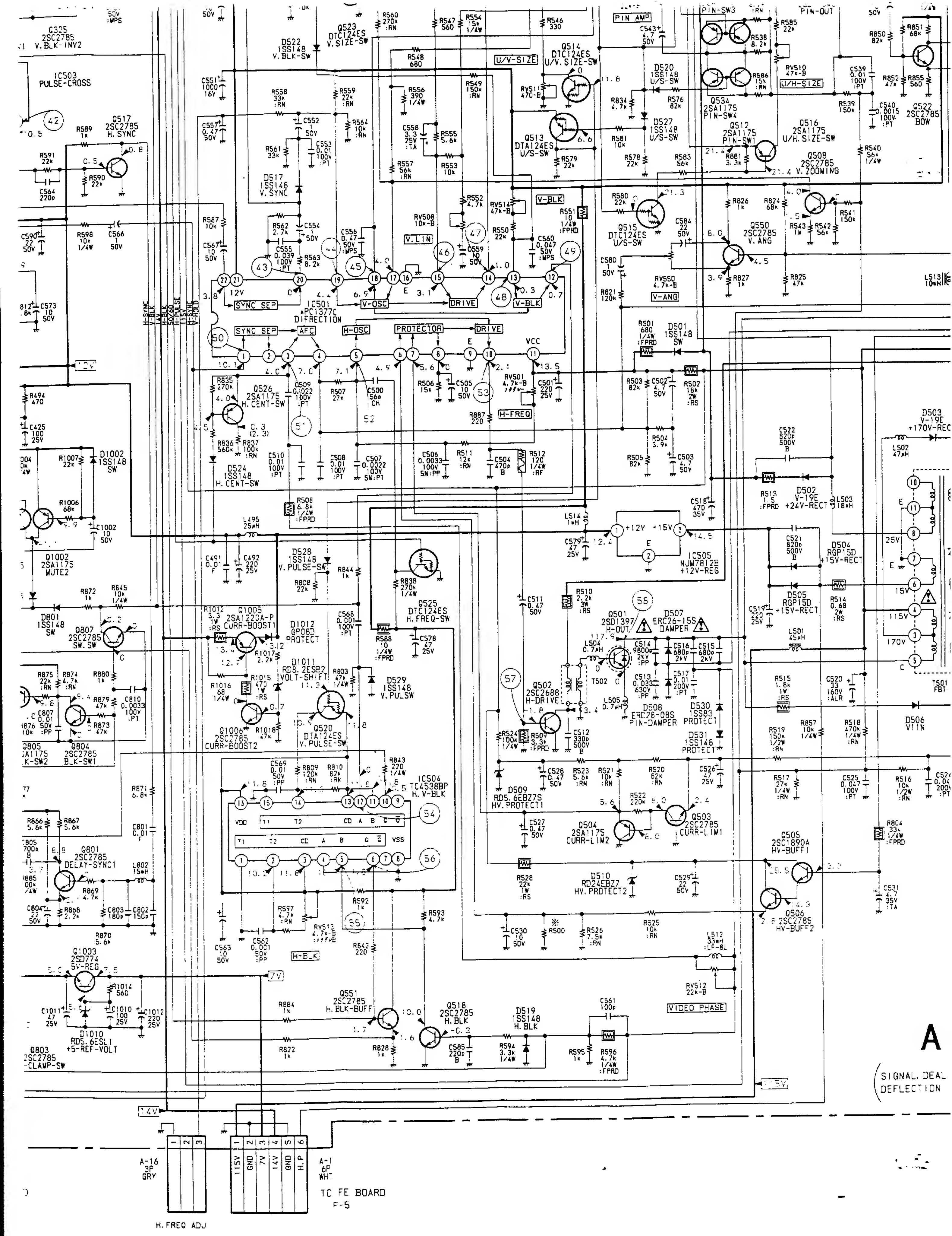
IC503 PULSE-CROSS
Q325 2SC2785 V.BLK-INV2
Q517 2SC2785 H.SYNC
D522 1SS148 V.BLK-SW
Q523 DTC124ES V.SIZE-SW
Q514 DTC124ES U/V.SIZE-SW
Q513 DTA124ES U/S-SW
D520 1SS148 U/S-SW
D527 1SS148 U/S-SW
Q534 2SA1175 PIN-SW4
Q512 2SA1175 PIN-SW1
Q516 2SA1175 U/H.SIZE-SW
Q508 2SC2785 V.ZOOMING
Q522 2SC2785 BOW
PIN AMP
PIN-SW3
PIN-OUT
U/V-SIZE
U/H-SIZE
D517 1SS148 V.SYNC
V.LIN
V-BLK
Q515 DTC124ES U/S-SW
Q550 2SC2785 V.ANG
V-ANG
IC501 μPC1377C DIFRECTION
SYNC SEP
V-OSC
DRIVE
AFC
H-OSC
PROTECTOR
H-FREQ
Q526 2SA1175 H.CENT-SW
D524 1SS148 H.CENT-SW
D501 1SS148 SW
D503 V-19E +170V-RECT
D502 V-19E +24V-RECT
IC505 NJM7812B +12V-REG
D504 RGP15D +15V-RECT
D505 RGP15D +15V-RECT
Q1002 2SA1175 MUTE2
D528 1SS148 V.PULSE-SW
Q525 DTC124ES H.FREQ-SW
Q1005 2SA1220A-P CURR-BOOST1
D1012 GP08D PROTECT
D1011 RD8.2ESB2 VOLT-SHIFT
D529 1SS148 V.PULSW
Q520 DTA124ES V.PULSE-SW
Q1006 2SC2785 CURR-BOOST2
Q501 2SD1397 H-OUT
D507 ERC26-15S DAMPER
Q502 2SC2688 H-DRIVE
T502
D508 ERD28-08S PIN-DAMPER
D530 1SS83 PROTECT
D531 1SS148 PROTECT
T501 FBT
D506 V11N
D801 1SS148 SW
Q807 2SC2785 SW.SW
Q805 2SA1175 K-SW2
Q804 2SC2785 BLK-SW1
IC504 TC4538BP H.V-BLK
D509 RD5.6EBZ7S HV.PROTECT1
Q504 2SA1175 CURR-LIM2
Q503 2SC2785 CURR-LIM1
Q505 2SC1890A HV-BUFF1
Q506 2SC2785 HV-BUFF2
D510 RD24EBZ7 HV.PROTECT2
Q801 2SC2785 DELAY-SYNC1
Q1003 2SD774 5V-REG
D1010 RD5.6ESL1 +5-REF-VOLT
Q803 2SC2785 CLAMP-SW
Q551 2SC2785 H.BLK-BUFF
Q518 2SC2785 H.BLK
D519 1SS148 H.BLK
H-BLK
VIDEO PHASE
RV512 22k-B
H-SYNC
V-BLK
14V
HV-PULSE
115V
V-SYNC
V-HOLD
12V
7V
14V
115V
A-16 3P GRY
H.FREQ ADJ
A-1 6P WHT
115V GND 7V 14V GND H.P
TO FE BOARD F-5
A
SIGNAL, DEAL
DEFLECTION

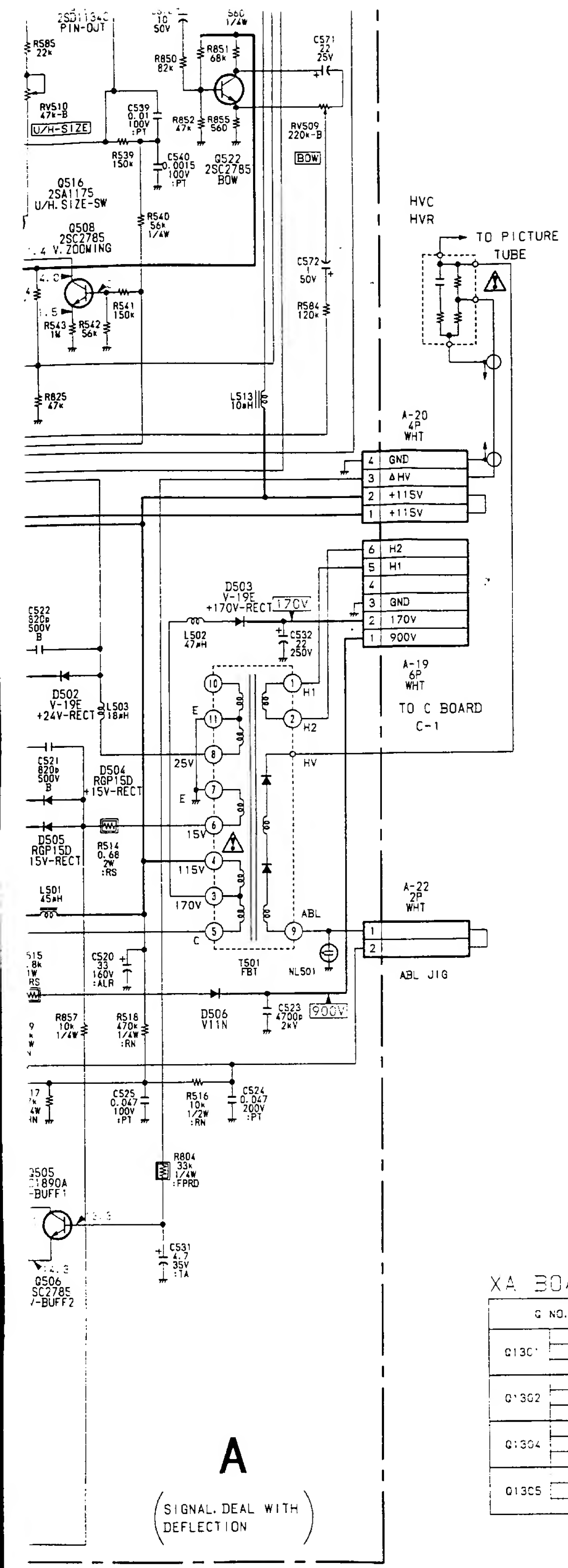
TO PICTURE TUBE
HVC
HVR
A-20 4P WHT
GND
ΔHV
+115V
+115V
H2
H1
GND
170V
900V
A-19 6P WHT
TO C BOARD C-1
T501 FBT
A-22 2P WHT
ABL JIG
D503 V-19E +170V-RECT
D502 V-19E +24V-RECT
D504 RGP15D +15V-RECT
D505 RGP15D 15V-RECT
D506 V11N
Q516 2SA1175 U/H. SIZE-SW
Q508 2SC2785 V. ZOOMING
Q522 2SC2785 BOW
RV510 47k-B U/H-SIZE
RV509 220k-B BOW
Q505 2SC1890A V-BUFF1
Q506 2SC2785 V-BUFF2
A
SIGNAL. DEAL WITH DEFLECTION

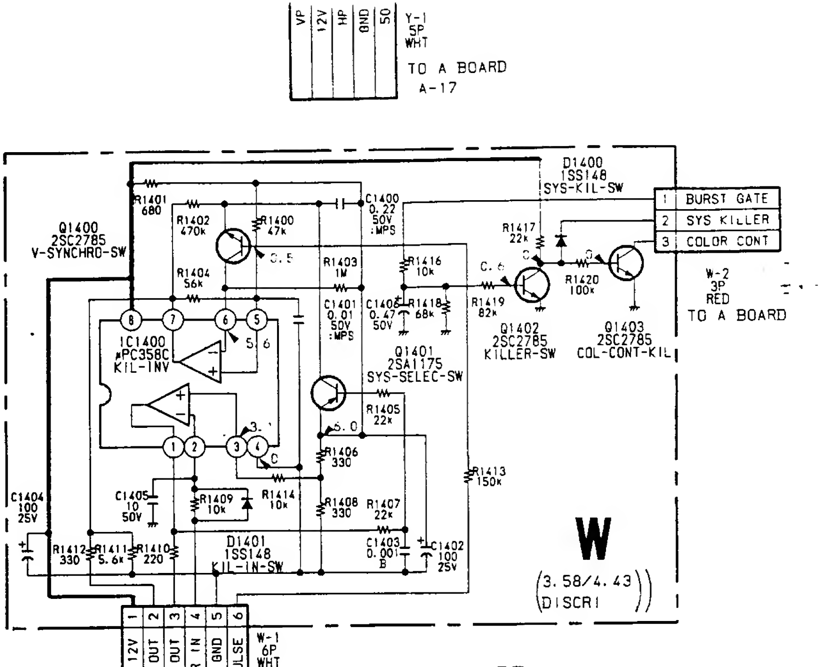
Y-1 5P WHT
TO A BOARD A-17
VP
12V
HP
GND
SG
Q1400 2SC2785 V-SYNCHRO-SW
IC1400 μPC358C KIL-INV
Q1401 2SA1175 SYS-SELEC-SW
D1400 1SS148 SYS-KIL-SW
D1401 1SS148 KIL-IN-SW
Q1402 2SC2785 KILLER-SW
Q1403 2SC2785 COL-CONT-KIL
BURST GATE
SYS KILLER
COLOR CONT
W-2 3P RED
TO A BOARD
W-1 6P WHT
TO A BOARD A-6
12V
OUT
KILLER OUT
KILLER IN
GND
V-PULSE
W
3.58/4.43 DISCRI

W BOARD

IC·NO	PIN·NO	PAL	SECAM	NTSC 3.58	NTSC 4.43
IC1400	①	0.6	11.0	11.0	0.6
	②	8.3	2.2	2.2	8.4
	⑤	8.2	3.8-7.1		8.3
	⑦	10.9			10.9

Q NO.		PAL	SECAM	NTSC 3.58	NTSC 4.43
Q1400	B				
	C				
	E	6.0	6.0	6.1	
Q1401	B	5.4	10.9	10.9	5.4
	C	6.0	4.5-7.3	4.5-7.3	6.0
	E				
Q1403	B				
	C	7.0	6.8	5.9	5.8
	E				

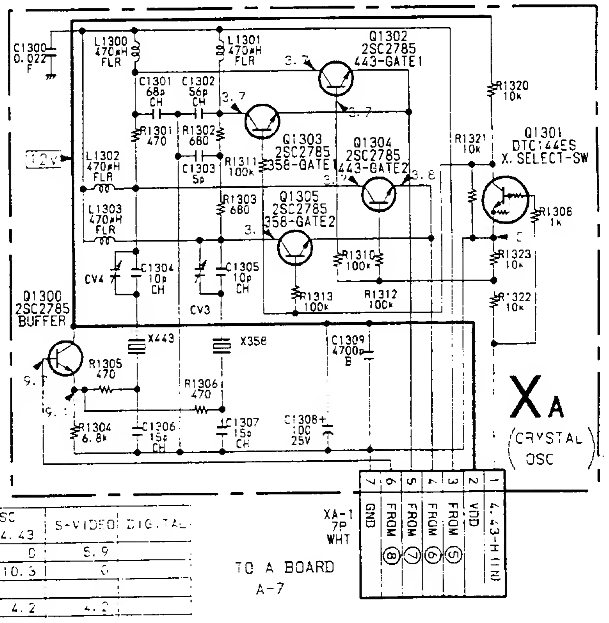
Q1300 2SC2785 BUFFER
Q1301 DTC144ES X. SELECT-SW
Q1302 2SC2785 443-GATE1
Q1303 2SC2785 358-GATE1
Q1304 2SC2785 443-GATE2
Q1305 2SC2785 358-GATE2
X443
X358
XA-1 7P WHT
TO A BOARD A-7
GND
FROM ⑧
FROM ⑦
FROM ⑥
FROM ⑤
VDD
4.43-H(IN)
XA
CRYSTAL OSC

XA BOARD

Q NO.		PAL	SECAM	NTSC 3.58	NTSC 4.43	S-VIDEO	DIGITAL
Q1301	B	0			0	5.9	
	C	10.3			10.3	0	
	E						
Q1302	B	4.2			4.2	4.2	
	C						
	E						
Q1304	B	4.1			3.9	0	
	C						
	E						
Q1305	B	0			0	4.2	
	C						
	E						

A BOARD IC1001 AN5265

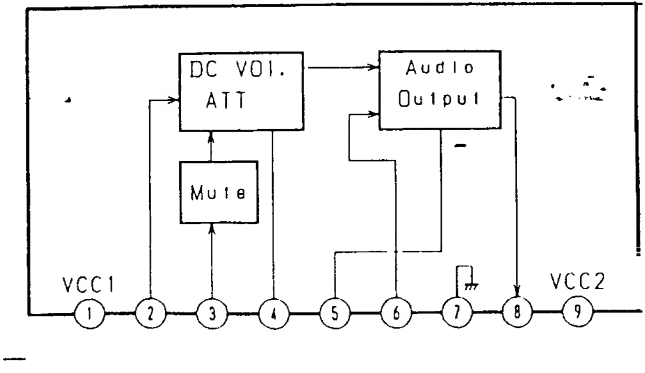
DC VOL. ATT
Audio Output
Mute
VCC1
VCC2
1
2
3
4
5
6
7
8
9

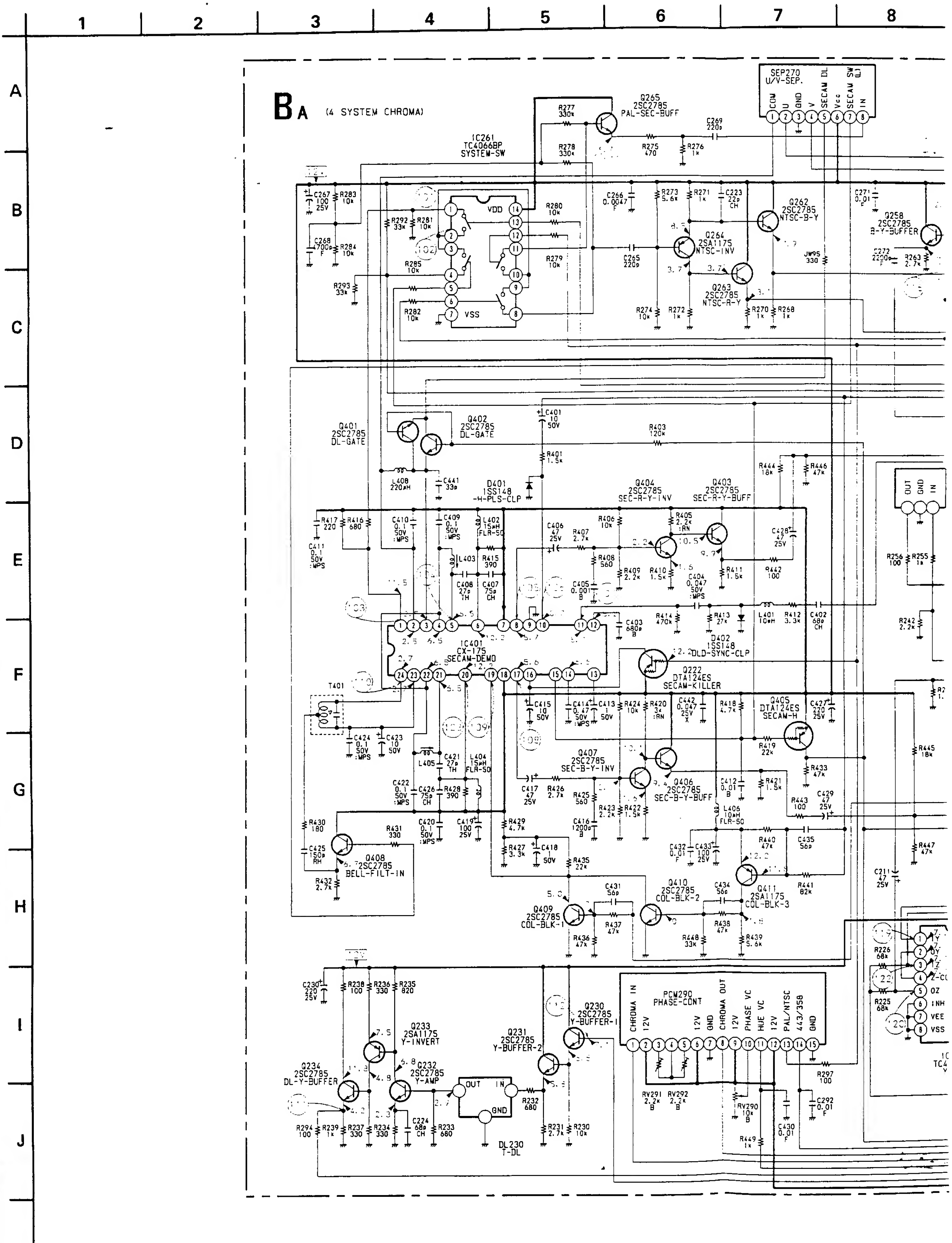

1
2
3
4
5
6
7
8
A
B
C
D
E
F
G
H
I
J
K
BA (4 SYSTEM CHROMA)
Q265 2SC2785 PAL-SEC-BUFF
IC261 TC4066BP SYSTEM-SW
SEP270 U/V-SEP.
COM
U
GND
V
SECAM DL
Vcc
SECAM SW
IN
R277 330k
R278 330k
R275 470
R276 1k
C269 220p
C267 100 25V
R283 10k
C268 4700p F
R284 10k
R292 33k
R281 10k
R285 10k
R293 33k
R282 10k
VDD
VSS
R280 10k
R279 10k
C266 0.0047 F
R273 5.6k
R271 1k
C223 22p CH
C265 220p
Q264 2SA1175 NTSC-INV
Q262 2SC2785 NTSC-B-Y
Q263 2SC2785 NTSC-R-Y
R274 10k
R272 1k
R270 1k
R268 1k
JW95 330
C271 0.01 F
Q258 2SC2785 B-Y-BUFFER
C272 2200p F
R263 2.7k
Q401 2SC2785 DL-GATE
Q402 2SC2785 DL-GATE
C401 10 50V
R401 1.5k
R403 120k
D401 1SS148 H-PLS-CLP
L408 220µH
C441 33p
Q404 2SC2785 SEC-R-Y-INV
Q403 2SC2785 SEC-R-Y-BUFF
R444 18k
R446 47k
OUT
GND
IN
R417 220
R416 680
C411 0.1 50V :MPS
C410 0.1 50V :MPS
C409 0.1 50V :MPS
L402 15µH FLR-50
L403
R415 390
C408 27p TH
C407 75p CH
C406 47 25V
R407 2.7k
R406 10k
R408 560
R409 2.2k
R410 1.5k
R405 2.2k :RN
C405 0.001 B
C404 0.047 50V :MPS
R411 1.5k
R442 100
C428 47 25V
R256 100
R255 1k
R414 470k
R413 27k
L401 10mH
R412 3.3k
C402 68p CH
C403 680p B
R242 2.2k
IC401 CX-175 SECAM-DEMO
D402 1SS148 DLD-SYNC-CLP
Q222 DTA124ES SECAM-KILLER
T401
C424 0.1 50V :MPS
C423 10 50V
C415 10 50V
C414 0.47 50V :MPS
C413 1 50V
R424 10k
R420 3k :RN
C442 0.047 25V X
R418 4.7k
Q405 DTA124ES SECAM-H
C427 220 25V
R419 22k
R433 47k
R445 18k
L405
C421 27p TH
L404 15µH FLR-50
C422 0.1 50V :MPS
C426 75p CH
R428 390
Q407 2SC2785 SEC-B-Y-INV
Q406 2SC2785 SEC-B-Y-BUFF
C417 47 25V
R426 2.7k
R425 560
R423 2.2k
R422 1.5k
C416 1200p B
L406 10mH FLR-50
C412 0.01 B
R421 1.5k
R443 100
C429 47 25V
R430 180
C425 150p RH
R431 330
Q408 2SC2785 BELL-FILT-IN
R432 2.7k
C420 0.1 50V :MPS
C419 100 25V
R429 4.7k
R427 3.3k
C418 1 50V
R435 22k
C432 0.01 F
C433 100 25V
R440 47k
C435 56p
Q411 2SA1175 COL-BLK-3
R441 82k
R447 47k
C211 47 25V
C431 56p
Q410 2SC2785 COL-BLK-2
C434 56p
Q409 2SC2785 COL-BLK-1
R437 47k
R436 47k
R438 47k
R448 33k
R439 5.6k
R226 68k
R225 68k
0Y
0Z
Z-C
INH
VEE
VSS
C230 220 25V
R238 100
R236 330
R235 820
Q233 2SA1175 Y-INVERT
Q232 2SC2785 Y-AMP
Q234 2SC2785 DL-Y-BUFFER
Q231 2SC2785 Y-BUFFER-2
Q230 2SC2785 Y-BUFFER-1
PCM290 PHASE-CONT
CHROMA IN
12V
GND
CHROMA OUT
PHASE VC
HUE VC
PAL/NTSC
443/358
R297 100
RV291 2.2k B
RV292 2.2k B
RV290 10k B
C430 0.01 F
C292 0.01 F
R449 1k
DL230 T-DL
OUT
IN
GND
C224 68p CH
R232 680
R294 100
R239 1k
R237 330
R234 330
R233 680
R231 2.7k
R230 10k

BA BOARD

REF NO.	PIN NO.	PAL	SECAM	NTSC 3.58	NTSC 4.43	S-VIDEO	[illegible]
Q201	[illegible]	[illegible]	[illegible]	[illegible]	[illegible]	[illegible]	[illegible]
Q210	[illegible]	[illegible]	[illegible]	[illegible]	[illegible]	[illegible]	[illegible]

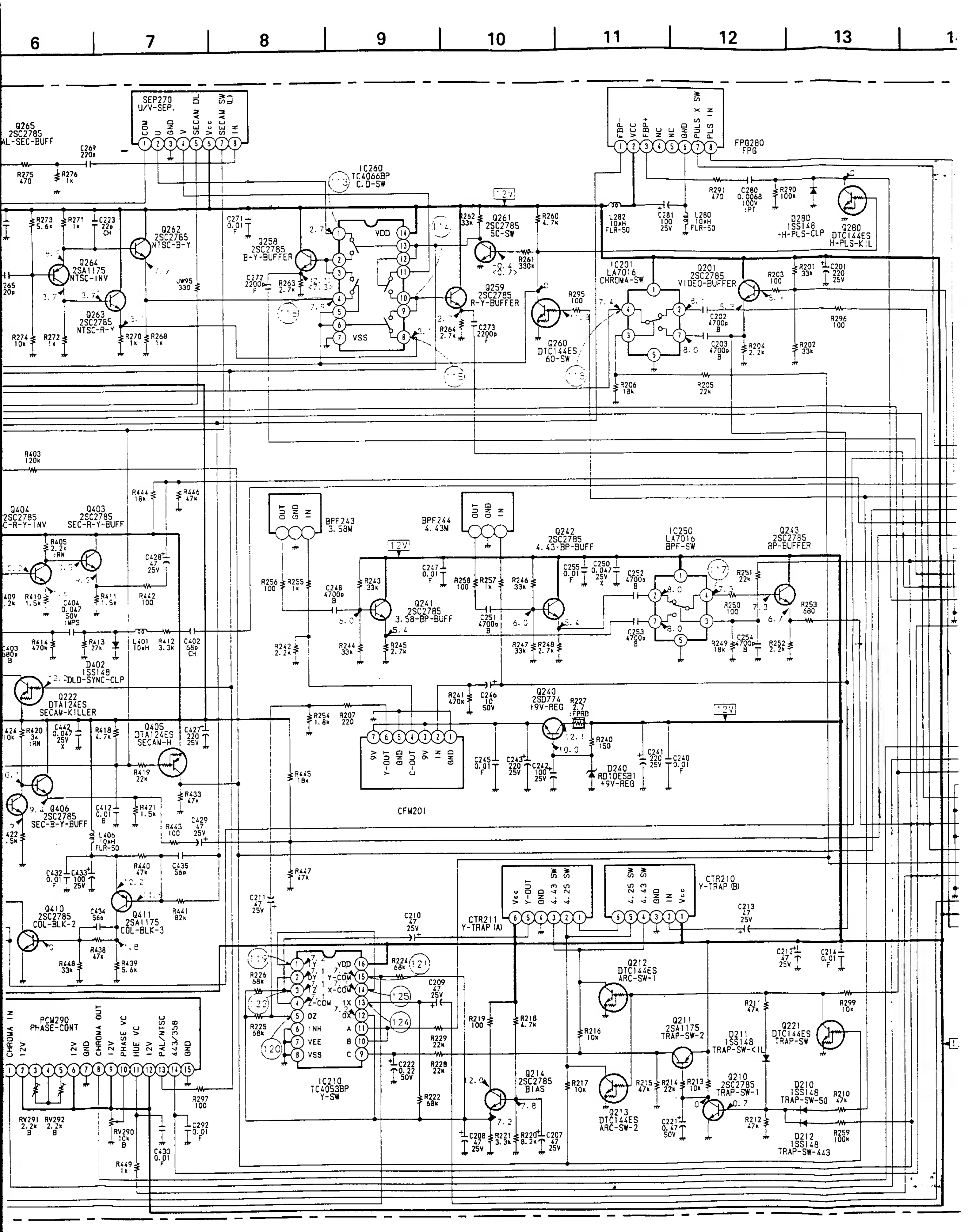6
7
8
9
10
11
12
13
SEP270
U/V-SEP.
COM
U
GND
V
SECAM DL
Vcc
SECAM SW (L)
IN
Q265
2SC2785
AL-SEC-BUFF
C269
220p
R275
470
R276
1k
IC260
TC4066BP
C.D-SW
12V
VDD
VSS
R273
5.6k
R271
1k
C223
22p
CH
Q262
2SC2785
NTSC-B-Y
Q264
2SA1175
NTSC-INV
Q263
2SC2785
NTSC-R-Y
R274
10k
R272
1k
R270
1k
R268
1k
C271
0.01
F
Q258
2SC2785
B-Y-BUFFER
C272
2200p
F
R263
2.7k
JW95
330
R262
33k
Q261
2SC2785
SO-SW
R260
4.7k
R261
330k
Q259
2SC2785
R-Y-BUFFER
R264
2.7k
C273
2200p
F
R295
100
Q260
DTC144ES
60-SW
FBP-
VCC
FBP+
NC
NC
GND
PULS X SW
PLS IN
FPG280
FPG
R291
470
C280
0.0068
100V
:PT
R290
100k
L282
10μH
FLR-50
C281
100
25V
L280
10μH
FLR-50
D280
1SS148
H-PLS-CLP
Q280
DTC144ES
H-PLS-K/L
IC201
LA7016
CHROMA-SW
Q201
2SC2785
VIDEO-BUFFER
R203
100
R201
33k
C201
220
25V
C202
4700p
B
C203
4700p
B
R204
2.2k
R296
100
R202
33k
R206
18k
R205
22k
R403
120k
R444
18k
R446
47k
Q404
2SC2785
C-R-Y-INV
Q403
2SC2785
SEC-R-Y-BUFF
R405
2.2k
:RN
C428
47
25V
R410
1.5k
C404
0.047
50V
:MPS
R411
1.5k
R442
100
R414
470k
R413
27k
L401
10μH
R412
3.3k
C402
68p
CH
C403
680p
B
D402
1SS148
DLD-SYNC-CLP
Q222
DTA124ES
SECAM-KILLER
R420
3k
:RN
C442
0.047
25V
X
R418
4.7k
Q405
DTA124ES
SECAM-H
C427
220
25V
R419
22k
R433
47k
Q406
2SC2785
SEC-B-Y-BUFF
C412
0.01
B
R421
1.5k
L406
10μH
FLR-50
R443
100
C429
47
25V
C432
0.01
F
C433
100
25V
R440
47k
C435
56p
Q410
2SC2785
COL-BLK-2
C434
56p
Q411
2SA1175
COL-BLK-3
R441
82k
R438
47k
R448
33k
R439
5.6k
OUT
GND
IN
BPF243
3.58M
BPF244
4.43M
Q242
2SC2785
4.43-BP-BUFF
IC250
LA7016
BPF-SW
Q243
2SC2785
BP-BUFFER
R256
100
R255
1k
C248
4700p
B
R243
33k
C247
0.01
F
Q241
2SC2785
3.58-BP-BUFF
R258
100
R257
1k
C251
4700p
B
R246
33k
C255
0.01
F
C250
0.047
25V
X
C252
4700p
B
C253
4700p
B
R251
22k
R250
100
R253
680
R242
2.2k
R244
33k
R245
2.7k
R247
33k
R248
2.7k
R249
18k
C254
4700p
B
R252
2.2k
R241
470k
C246
10
50V
Q240
2SD774
+9V-REG
R227
2.7
:FPRD
R254
1.8k
R207
220
9V
Y-OUT
GND
C-OUT
9V
IN
GND
CFM201
C245
0.01
F
C243
220
25V
C242
100
25V
R240
150
D240
RD10ESB1
+9V-REG
C241
220
25V
C240
0.01
F
R445
18k
R447
47k
C211
47
25V
C210
47
25V
Vcc
Y-OUT
GND
4.43 SW
4.25 SW
4.25 SW
4.43 SW
GND
IN
Vcc
CTR211
Y-TRAP (A)
CTR210
Y-TRAP (B)
C213
47
25V
C212
47
25V
C214
0.01
F
IC210
TC4053BP
Y-SW
R224
68k
R226
68k
R225
68k
C209
47
25V
C222
0.22
50V
R229
22k
R228
22k
R222
68k
Q212
DTC144ES
ARC-SW-1
R219
100
R218
4.7k
R216
10k
Q214
2SC2785
BIAS
R217
10k
Q213
DTC144ES
ARC-SW-2
Q211
2SA1175
TRAP-SW-2
R215
47k
R214
22k
R213
10k
D211
1SS148
TRAP-SW-KIL
R211
47k
Q221
DTC144ES
TRAP-SW
R299
10k
Q210
2SC2785
TRAP-SW-1
C221
0.47
50V
D210
1SS148
TRAP-SW-50
R210
47k
R212
47k
D212
1SS148
TRAP-SW-443
R259
100k
C208
47
25V
R221
3.3k
R220
8.2k
C207
47
25V
PCM290
PHASE-CONT
CHROMA IN
12V
12V
GND
CHROMA OUT
12V
PHASE VC
HUE VC
12V
PAL/NTSC
443/358
GND
RV291
2.2k
B
RV292
2.2k
B
RV290
10k
B
C430
0.01
F
C292
0.01
F
R297
100
R449
1k

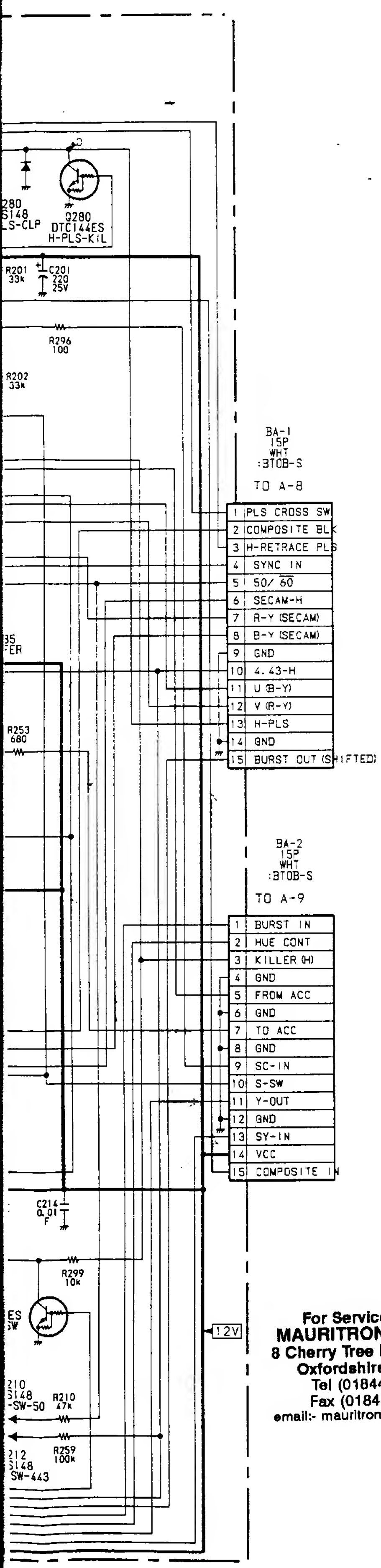
280
S148
LS-CLP
Q280
DTC144ES
H-PLS-KIL
R201
33k
C201
220
25V
R296
100
R202
33k
BA-1
15P
WHT
:BTOB-S
TO A-8
1 PLS CROSS SW
2 COMPOSITE BLK
3 H-RETRACE PLS
4 SYNC IN
5 50/60
6 SECAM-H
7 R-Y (SECAM)
8 B-Y (SECAM)
9 GND
10 4.43-H
11 U (B-Y)
12 V (R-Y)
13 H-PLS
14 GND
15 BURST OUT (SHIFTED)
35
FER
R253
680
BA-2
15P
WHT
:BTOB-S
TO A-9
1 BURST IN
2 HUE CONT
3 KILLER (H)
4 GND
5 FROM ACC
6 GND
7 TO ACC
8 GND
9 SC-IN
10 S-SW
11 Y-OUT
12 GND
13 SY-IN
14 VCC
15 COMPOSITE IN
C214
0.01
F
R299
10k
ES
SW
12V
210
S148
-SW-50
R210
47k
R259
100k
212
S148
SW-443

For Service Manuals
MAURITRON SERVICES
8 Cherry Tree Road, Chinnor
Oxfordshire, OX9 4QY.
Tel (01844) 351694
Fax (01844) 352554
email:- mauritron@dial.pipex.com

BA BOARD WAVEFORM

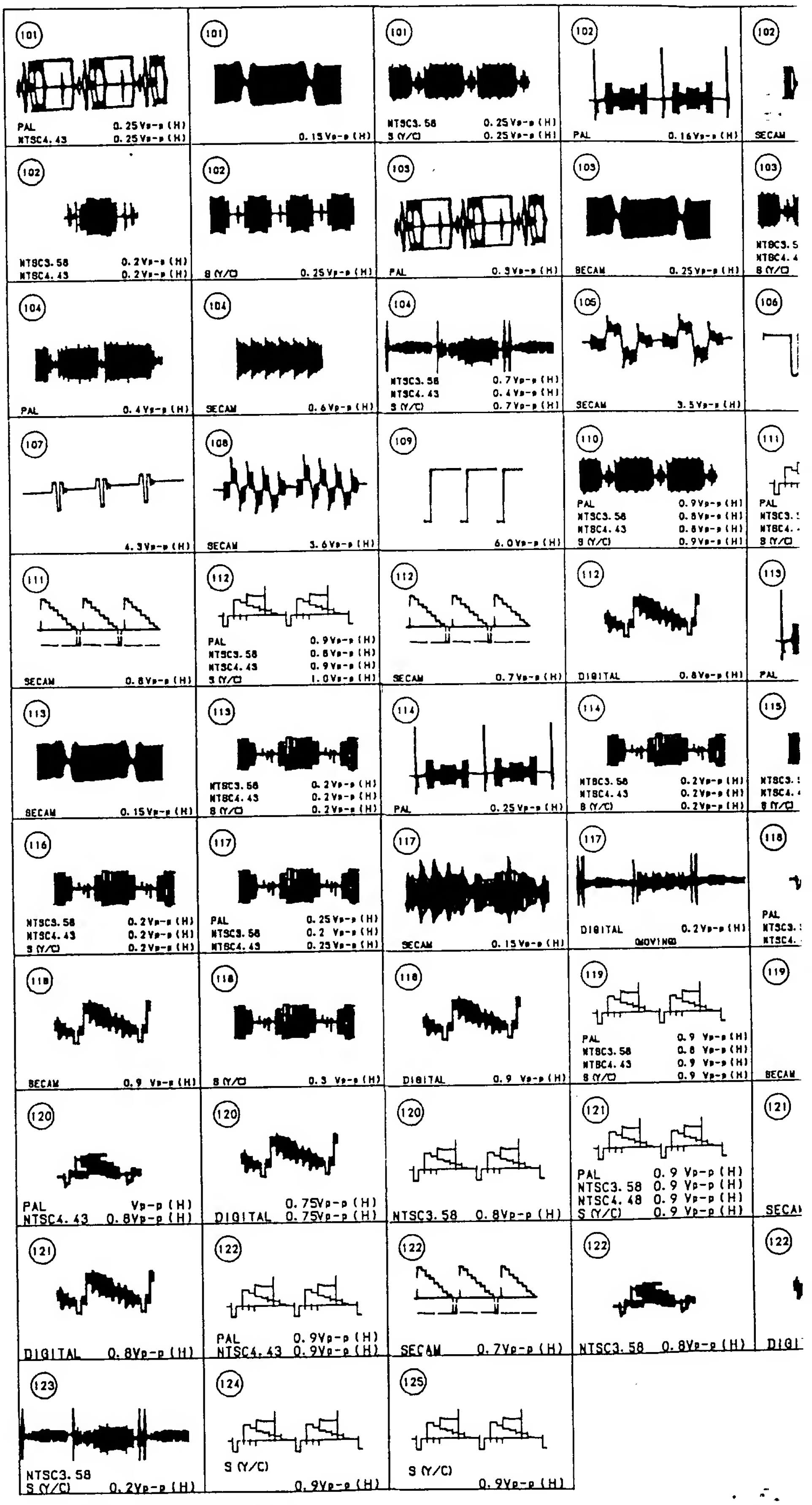

V BOARD WAVEFORM

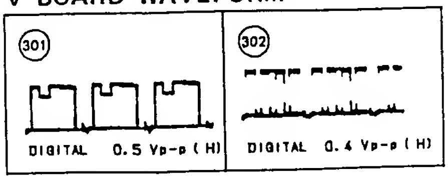

20 21 22 23 24 25 26 27 28

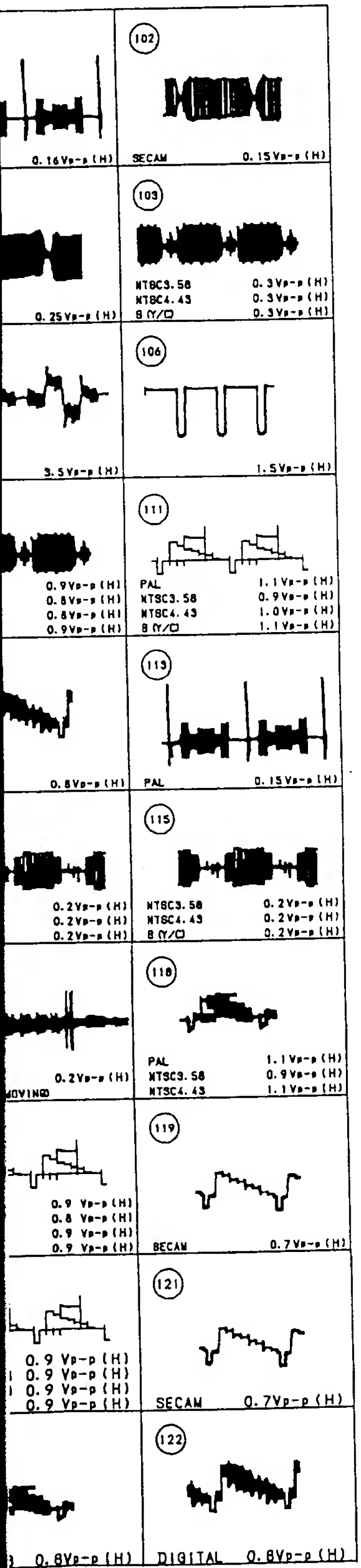

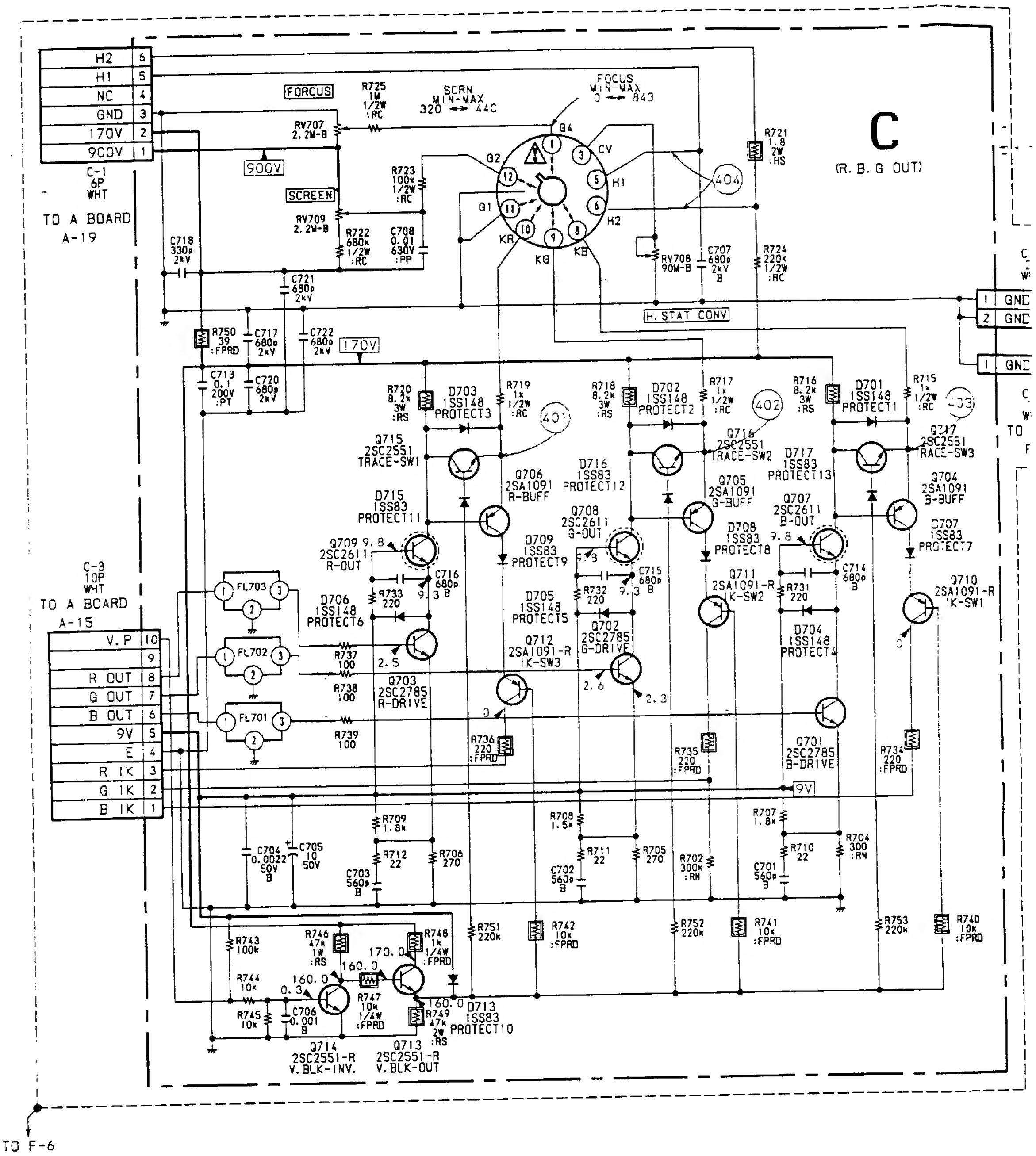

C
(R. B. G OUT)
H2 6
H1 5
NC 4
GND 3
170V 2
900V 1
C-1 6P WHT
TO A BOARD A-19
FORCUS
SCREEN
900V
R725 1M 1/2W :RC
SCRN MIN-MAX 320 → 440
FOCUS MIN-MAX 0 → 843
RV707 2.2M-B
RV709 2.2M-B
R723 100k 1/2W :RC
R722 680k 1/2W :RC
C708 0.01 630V :PP
C718 330p 2kV
C721 680p 2kV
G4 G2 G1 CV H1 H2 KR KG KB
(404)
R721 1.8 2W :RS
RV708 90M-B
C707 680p 2kV B
R724 220k 1/2W :RC
H.STAT CONV
1 GND
2 GND
1 GND
R750 39 :FPRD
C717 680p 2kV
C722 680p 2kV
170V
C713 0.1 200V :PT
C720 680p 2kV
R720 8.2k 3W :RS
D703 1SS148 PROTECT3
R719 1k 1/2W :RC
(401)
R718 8.2k 3W :RS
D702 1SS148 PROTECT2
R717 1k 1/2W :RC
(402)
R716 8.2k 3W :RS
D701 1SS148 PROTECT1
R715 1k 1/2W :RC
(403)
Q715 2SC2551 TRACE-SW1
Q716 2SC2551 TRACE-SW2
Q717 2SC2551 TRACE-SW3
Q706 2SA1091 R-BUFF
D716 1SS83 PROTECT12
Q705 2SA1091 G-BUFF
D717 1SS83 PROTECT13
Q704 2SA1091 B-BUFF
D715 1SS83 PROTECT11
Q708 2SC2611 G-OUT
Q707 2SC2611 B-OUT
Q709 2SC2611 R-OUT
D709 1SS83 PROTECT9
D708 1SS83 PROTECT8
D707 1SS83 PROTECT7
C-3 10P WHT
TO A BOARD A-15
FL703 FL702 FL701
C716 680p B
C715 680p B
C714 680p B
R733 220
R732 220
R731 220
D706 1SS148 PROTECT6
D705 1SS148 PROTECT5
D704 1SS148 PROTECT4
Q711 2SA1091-R K-SW2
Q710 2SA1091-R K-SW1
Q712 2SA1091-R K-SW3
Q702 2SC2785 G-DRIVE
Q703 2SC2785 R-DRIVE
Q701 2SC2785 B-DRIVE
V.P 10
9
R OUT 8
G OUT 7
B OUT 6
9V 5
E 4
R IK 3
G IK 2
B IK 1
R737 100
R738 100
R739 100
R736 220 :FPRD
R735 220 :FPRD
R734 220 :FPRD
9V
R709 1.8k
R708 1.5k
R707 1.8k
R712 22
R711 22
R710 22
R706 270
R705 270
R704 300 :RN
R702 300k :RN
C704 0.0022 50V B
C705 10 50V
C703 560p B
C702 560p B
C701 560p B
R743 100k
R746 47k 1W :RS
R748 1k 1/4W :FPRD
R751 220k
R742 10k :FPRD
R752 220k
R741 10k :FPRD
R753 220k
R740 10k :FPRD
R744 10k
R745 10k
C706 0.001 B
R747 10k 1/4W :FPRD
R749 47k 2W :RS
D713 1SS83 PROTECT10
Q714 2SC2551-R V.BLK-INV.
Q713 2SC2551-R V.BLK-OUT
170.0 160.0 160.0 160.0 0.3 9.8 9.3 2.5 2.6 2.3 0
TO F-6

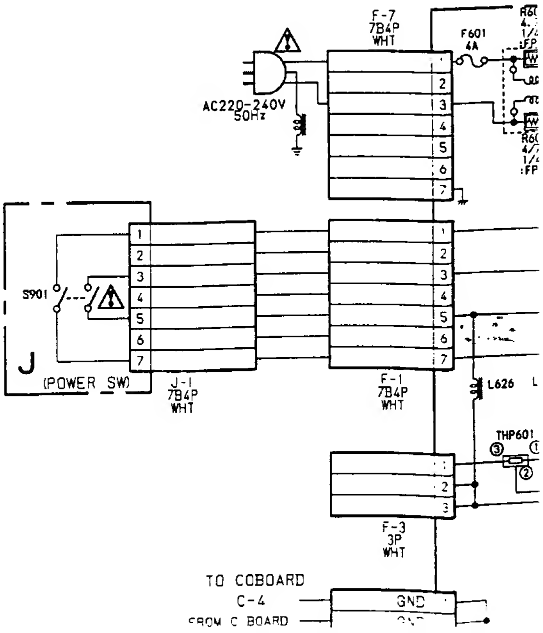

F-7 7B4P WHT
F601 4A
AC220-240V 50Hz
S901
J
(POWER SW)
J-1 7B4P WHT
F-1 7B4P WHT
L626
THP601
F-3 3P WHT
TO COBOARD C-4
FROM C BOARD
GND

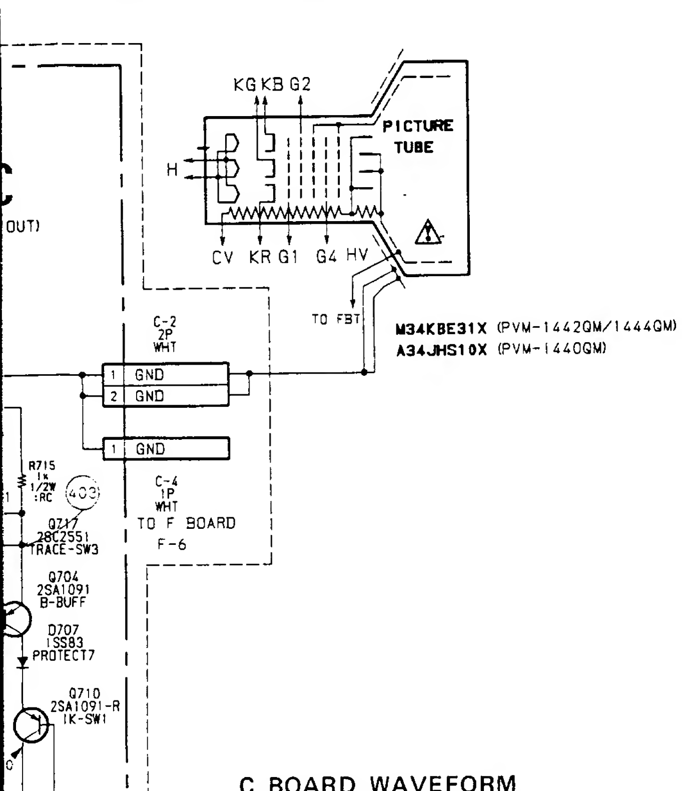
KG KB G2
PICTURE TUBE
H
CV KR G1 G4 HV
TO FBT
M34KBE31X (PVM-1442QM/1444QM)
A34JHS10X (PVM-1440QM)
OUT)
C-2
2P
WHT
1 GND
2 GND
1 GND
C-4
1P
WHT
TO F BOARD
F-6
R715
1k
1/2W
:RC
403
Q717
2SC2551
TRACE-SW3
Q704
2SA1091
B-BUFF
D707
1SS83
PROTECT7
Q710
2SA1091-R
IK-SW1

C BOARD

Q NO.		[illegible]	SECAM	NTSC 3.58	NTSC 4.43	[illegible]	[illegible]
Q704	B	[illegible]	[illegible]	[illegible]	[illegible]	[illegible]	[illegible]
	C	[illegible]	[illegible]	[illegible]	[illegible]	[illegible]	[illegible]
	E	[illegible]	[illegible]	[illegible]	[illegible]	[illegible]	[illegible]
Q705	B	[illegible]	[illegible]	154.0	[illegible]		
	C	[illegible]	[illegible]	[illegible]	127.5		
	E	[illegible]	[illegible]	[illegible]	[illegible]	[illegible]	[illegible]
Q706	B	[illegible]	[illegible]	140.7	140.8	[illegible]	[illegible]
	C						
	E	[illegible]	[illegible]	138.0	[illegible]	[illegible]	[illegible]
Q707	B	[illegible]	[illegible]	140.7	[illegible]	[illegible]	[illegible]
	C	154.5	154.5	153.9	[illegible]	[illegible]	[illegible]
	E						
Q708	B						
	C	154.3	[illegible]	154.0	[illegible]		
	E						
Q709	B						
	C	[illegible]	140.4	140.7	[illegible]	[illegible]	[illegible]
	E						
Q710	B						
	C						
	E	[illegible]	[illegible]	[illegible]	[illegible]		
Q711	B	[illegible]	[illegible]	[illegible]	158.4		
	C						
	E	[illegible]	[illegible]	[illegible]	[illegible]		
Q712	B	[illegible]	[illegible]	[illegible]	[illegible]		
	C						
	E	[illegible]	[illegible]	[illegible]	[illegible]		
[illegible]	B	[illegible]	[illegible]	[illegible]	[illegible]	[illegible]	[illegible]
	C	[illegible]	[illegible]	[illegible]	[illegible]	[illegible]	[illegible]
	E	[illegible]	[illegible]	[illegible]	[illegible]	[illegible]	[illegible]
[illegible]	B	[illegible]	[illegible]	[illegible]	[illegible]	[illegible]	[illegible]
	C	[illegible]	[illegible]	[illegible]	[illegible]	[illegible]	[illegible]
	E	[illegible]	[illegible]	[illegible]	151.7	[illegible]	[illegible]
Q717	B	[illegible]	[illegible]	[illegible]	[illegible]	[illegible]	[illegible]
	C	[illegible]	154.5	[illegible]		[illegible]	[illegible]
	E	[illegible]	[illegible]	[illegible]	[illegible]	[illegible]	[illegible]

C BOARD WAVEFORM

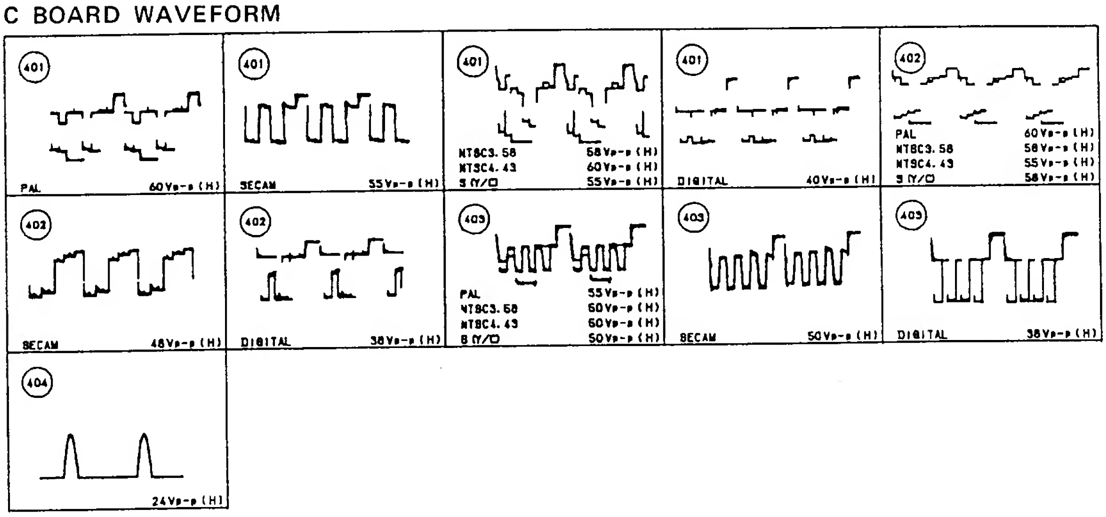
401
PAL 60Vp-p (H)
401
SECAM 55Vp-p (H)
401
NTSC3.58 58Vp-p (H)
NTSC4.43 60Vp-p (H)
S (Y/C) 55Vp-p (H)
401
DIGITAL 40Vp-p (H)
402
PAL 60Vp-p (H)
NTSC3.58 58Vp-p (H)
NTSC4.43 55Vp-p (H)
S (Y/C) 58Vp-p (H)
402
SECAM 48Vp-p (H)
402
DIGITAL 38Vp-p (H)
403
PAL 55Vp-p (H)
NTSC3.58 60Vp-p (H)
NTSC4.43 60Vp-p (H)
S (Y/C) 50Vp-p (H)
403
SECAM 50Vp-p (H)
403
DIGITAL 38Vp-p (H)
404
24Vp-p (H)

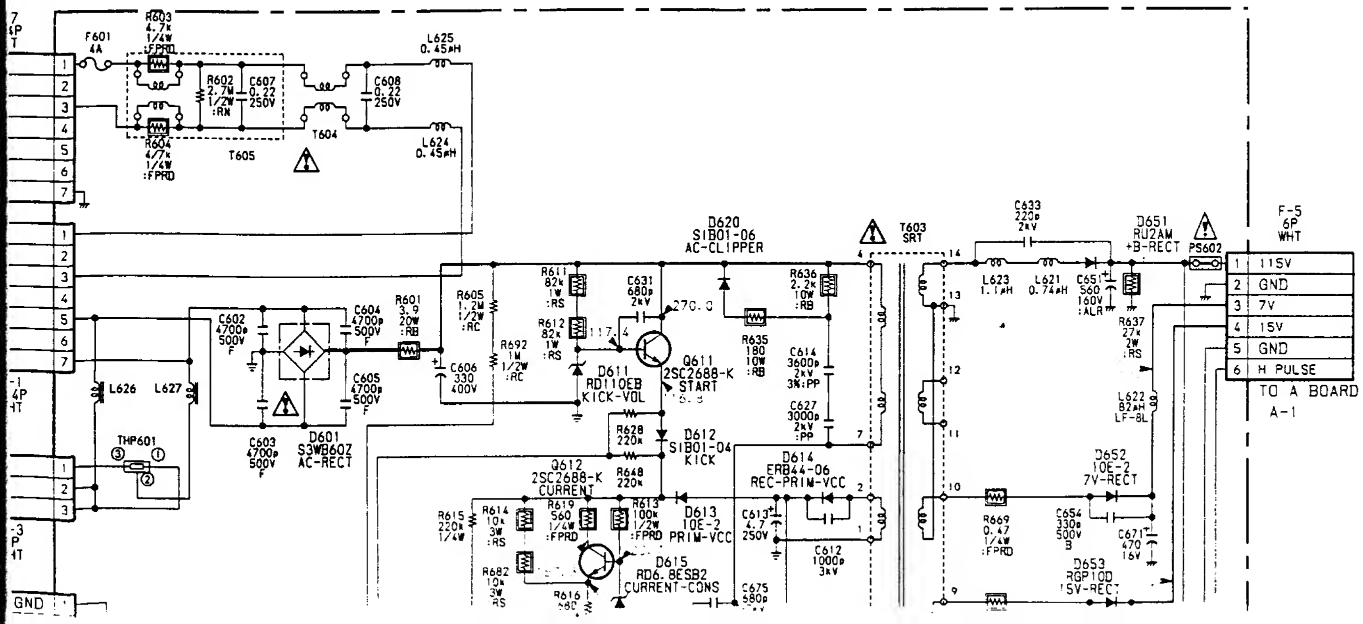
F601
4A
R603
4.7k
1/4W
:FPRD
R602
2.7M
1/2W
:RN
C607
0.22
250V
T605
R604
4.7k
1/4W
:FPRD
T604
C608
0.22
250V
L625
0.45μH
L624
0.45μH
GND
L626
L627
THP601
C602
4700p
500V
F
C603
4700p
500V
F
C604
4700p
500V
F
C605
4700p
500V
F
D601
S3WB60Z
AC-RECT
R601
3.9
20W
:RB
C606
330
400V
R605
1.2M
1/2W
:RC
R692
1M
1/2W
:RC
R611
82k
1W
:RS
R612
82k
1W
:RS
C631
680p
2kV
D611
RD110EB
KICK-VOL
Q611
2SC2688-K
START
D620
S1B01-06
AC-CLIPPER
270.0
117.4
R636
2.2k
10W
:RB
R635
180
10W
:RB
C614
3600p
2kV
3%:PP
C627
3000p
2kV
:PP
D612
S1B01-04
KICK
R628
220k
R648
220k
Q612
2SC2688-K
CURRENT
R619
560
1/4W
:FPRD
R613
100k
1/2W
:FPRD
R615
220k
1/4W
R614
10k
3W
:RS
R682
10k
3W
:RS
R616
D613
10E-2
PRIM-VCC
D615
RD6.8ESB2
CURRENT-CONS
D614
ERB44-06
REC-PRIM-VCC
C613
4.7
250V
C612
1000p
3kV
C675
580p
T603
SRT
C633
220p
2kV
L623
1.1μH
L621
0.74μH
C651
560
160V
:ALR
D651
RU2AM
+B-RECT
PS602
R637
27k
2W
:RS
L622
82μH
LF-8L
D652
10E-2
7V-RECT
R669
0.47
1/4W
:FPRD
C654
330p
500V
B
C671
470
16V
D653
RGP10D
15V-RECT
F-5
6P
WHT
1 115V
2 GND
3 7V
4 15V
5 GND
6 H PULSE
TO A BOARD
A-1
7P
4P
3P

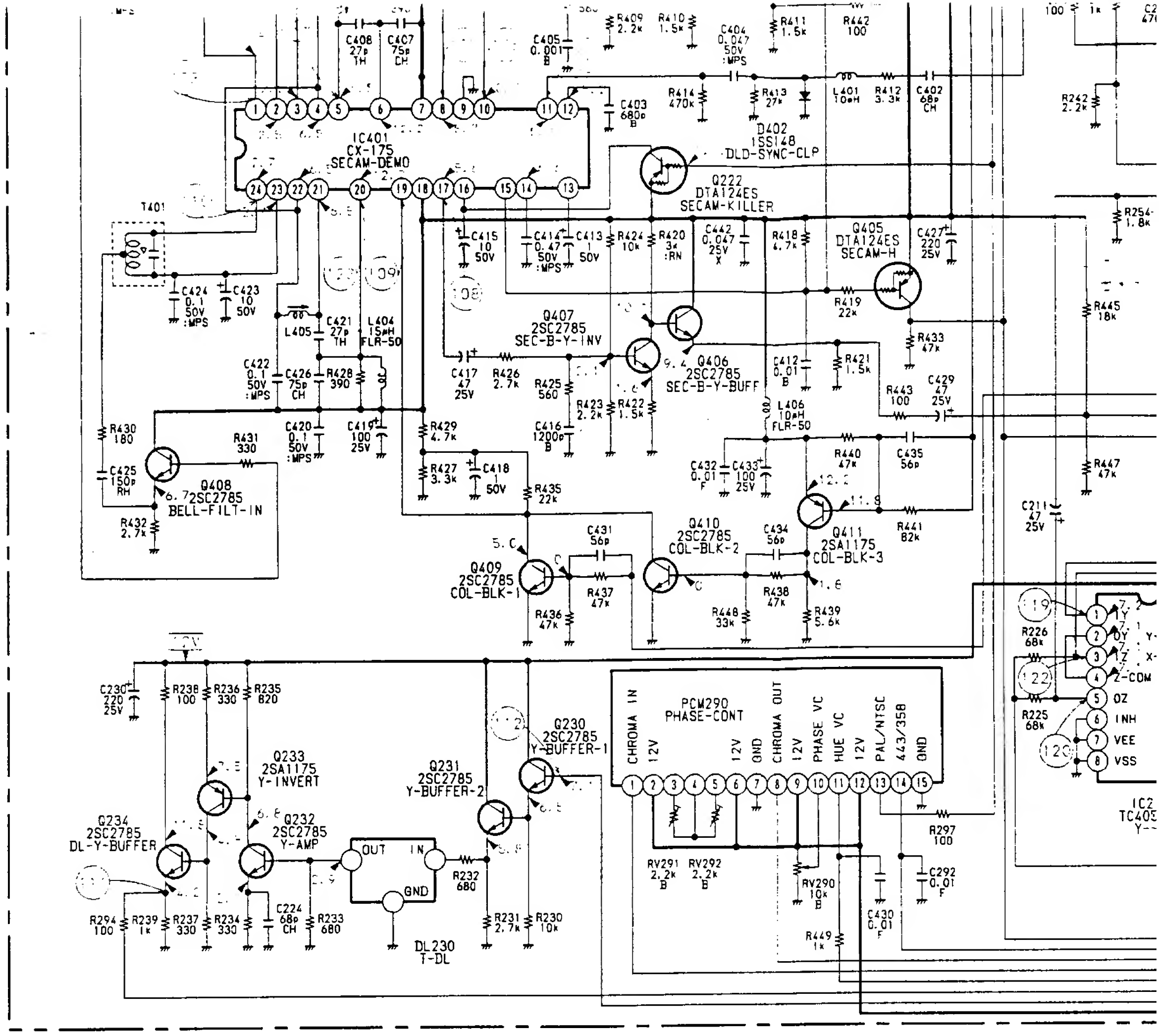
IC401
CX-175
SECAM-DEMO
T401
Q222
DTA124ES
SECAM-KILLER
D402
1SS148
DLD-SYNC-CLP
Q405
DTA124ES
SECAM-H
Q407
2SC2785
SEC-B-Y-INV
Q406
2SC2785
SEC-B-Y-BUFF
Q408
2SC2785
BELL-FILT-IN
L404
15μH
FLR-50
L406
10μH
FLR-50
Q409
2SC2785
COL-BLK-1
Q410
2SC2785
COL-BLK-2
Q411
2SA1175
COL-BLK-3
12V
Q233
2SA1175
Y-INVERT
Q232
2SC2785
Y-AMP
Q234
2SC2785
DL-Y-BUFFER
Q231
2SC2785
Y-BUFFER-2
Q230
2SC2785
Y-BUFFER-1
DL230
T-DL
OUT
IN
GND
PCM290
PHASE-CONT
CHROMA IN
12V
12V
GND
CHROMA OUT
12V
PHASE VC
HUE VC
12V
PAL/NTSC
443/358
GND
RV291
2.2k
RV292
2.2k
RV290
10k
Y
OY
Z
Z-COM
OZ
INH
VEE
VSS
TC403
C402 68p CH
C403 680p B
C404 0.047 50V :MPS
C405 0.001 B
C407 75p CH
C408 27p TH
C413 1 50V
C414 0.47 50V :MPS
C415 10 50V
C416 1200p B
C417 47 25V
C418 1 50V
C419 100 25V
C420 0.1 50V :MPS
C421 27p TH
C422 0.1 50V :MPS
C423 10 50V
C424 0.1 50V :MPS
C425 150p RH
C426 75p CH
C427 220 25V
C429 47 25V
C430 0.01 F
C431 56p
C432 0.01 F
C433 100 25V
C434 56p
C435 56p
C442 0.047 25V
C412 0.01 B
C211 47 25V
C224 68p CH
C230 220 25V
C292 0.01 F
L401 10μH
L405
R409 2.2k
R410 1.5k
R411 1.5k
R412 3.3k
R413 27k
R414 470k
R418 4.7k
R419 22k
R420 3k :RN
R421 1.5k
R422 1.5k
R423 2.2k
R424 10k
R425 560
R426 2.7k
R427 3.3k
R428 390
R429 4.7k
R430 180
R431 330
R432 2.7k
R433 47k
R435 22k
R436 47k
R437 47k
R438 47k
R439 5.6k
R440 47k
R441 82k
R442 100
R443 100
R445 18k
R447 47k
R448 33k
R449 1k
R225 68k
R226 68k
R230 10k
R231 2.7k
R232 680
R233 680
R234 330
R235 820
R236 330
R237 330
R238 100
R239 1k
R242 2.2k
R254 1.8k
R294 100
R297 100

BA BOARD

IC-NO	PIN-NO	PAL	SECAM	NTSC 3.58	NTSC 4.43	S-VIDEO	DIGITAL
IC201	③	0	0	0	0	4.5	[illegible]
IC210	⑨	12.2	12.2	0	12.2	0	[illegible]
	⑩	0	0	0	10.6	11.	[illegible]
	⑪	0	0	0	10.6	11.	[illegible]
IC250	③	4.7	0.8-1.6	0	4.	[illegible]	[illegible]
IC260	⑦	2.6	2.7	7.9	[illegible]	[illegible]	[illegible]
	⑤	0	0	10.9	10.9	[illegible]	[illegible]
	⑨⑩⑪	3.3	3.4	3.1	3.	[illegible]	3.
	⑫⑬	12.2	12.2	0	0	[illegible]	0
IC261	①	10.8	10.8	10.8	10.8	[illegible]	6.4
	②③	7.3	10.8	7.3	7.4	[illegible]	[illegible]
	④	7.3	7.3	7.3	[illegible]	[illegible]	[illegible]
	⑤	10.8	0	10.8	[illegible]	[illegible]	[illegible]
	[illegible]	0	0	[illegible]	[illegible]	[illegible]	[illegible]
	[illegible]	[illegible]	[illegible]	7.3	[illegible]	[illegible]	[illegible]
	[illegible]	7.3	10.8	7.3	[illegible]	[illegible]	[illegible]
	[illegible]	7.3	10.8	3.4	[illegible]	[illegible]	[illegible]
	[illegible]	12.2	[illegible]	0	[illegible]	[illegible]	[illegible]
	[illegible]	[illegible]	[illegible]	[illegible]	[illegible]	[illegible]	[illegible]
IC401	[illegible]	[illegible]	[illegible]	[illegible]	[illegible]	[illegible]	[illegible]
	[illegible]	10.8	[illegible]	[illegible]	[illegible]	[illegible]	[illegible]
	[illegible]	7.6	6.9	[illegible]	[illegible]	[illegible]	[illegible]

Q NO.		PA	SECAM	NTSC 3.58	NTSC	[illegible]	DIGITAL
Q211	E	[illegible]	[illegible]	[illegible]	[illegible]	[illegible]	[illegible]
	C	[illegible]	[illegible]	[illegible]	[illegible]	[illegible]	[illegible]
	B	[illegible]	[illegible]	[illegible]	[illegible]	[illegible]	[illegible]
Q212	E	[illegible]	[illegible]	[illegible]	[illegible]	[illegible]	[illegible]
	C	[illegible]	[illegible]	[illegible]	[illegible]	[illegible]	[illegible]
	B	[illegible]	[illegible]	[illegible]	[illegible]	[illegible]	[illegible]
Q213	E	[illegible]	[illegible]	[illegible]	[illegible]	[illegible]	[illegible]
	C	[illegible]	[illegible]	[illegible]	[illegible]	[illegible]	[illegible]
	B	[illegible]	[illegible]	[illegible]	[illegible]	[illegible]	[illegible]
Q221	E	[illegible]	[illegible]	[illegible]	[illegible]	[illegible]	[illegible]
	C	[illegible]	[illegible]	[illegible]	[illegible]	[illegible]	[illegible]
	B	[illegible]	[illegible]	[illegible]	[illegible]	[illegible]	[illegible]
[illegible]	[illegible]	[illegible]	[illegible]	[illegible]	[illegible]	[illegible]	[illegible]

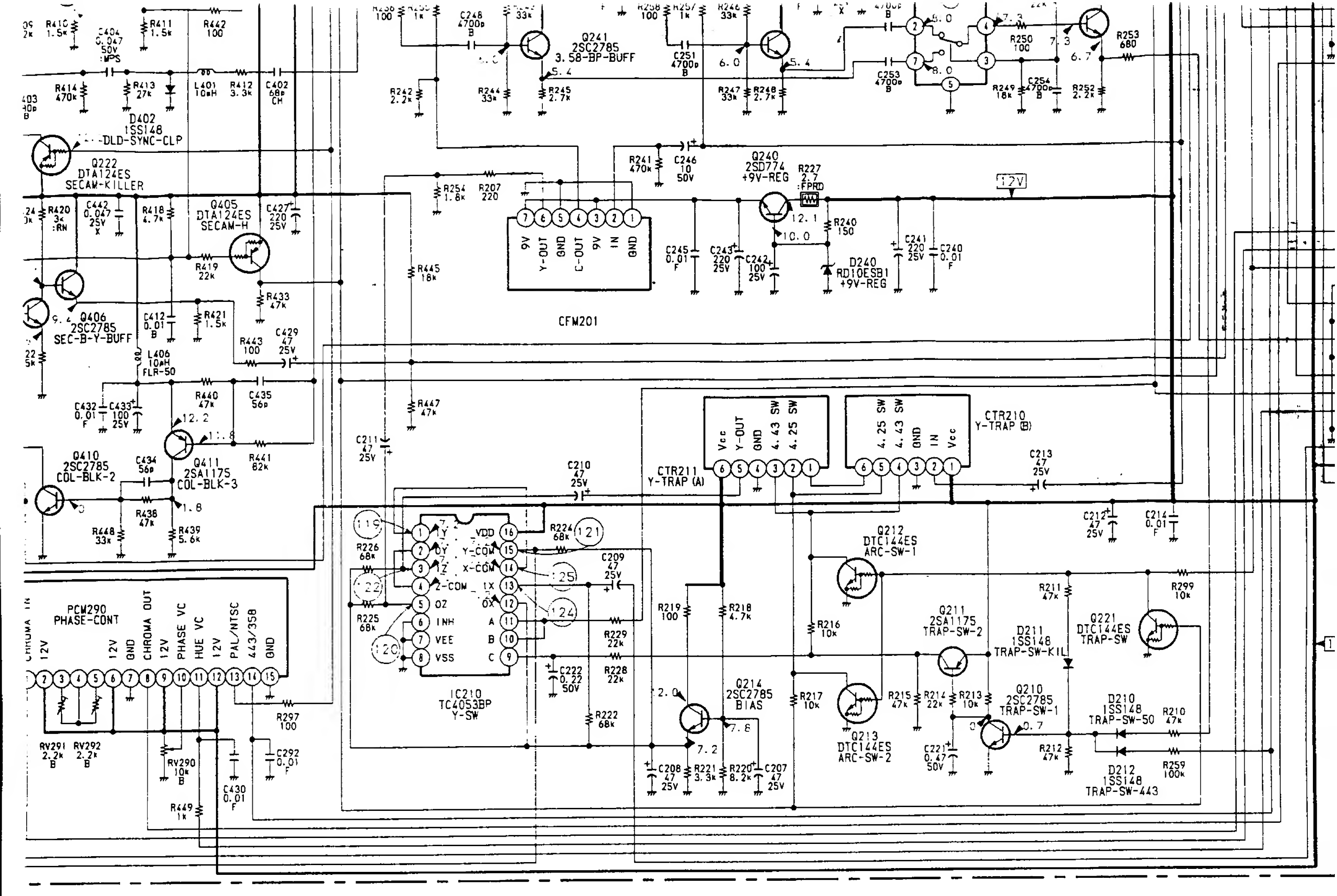

Q241
2SC2785
3.58-BP-BUFF
Q240
2SD774
+9V-REG
D240
RD10ESB1
+9V-REG
12V
CFM201
9V
Y-OUT
GND
C-OUT
9V
IN
GND
D402
1SS148
DLD-SYNC-CLP
Q222
DTA124ES
SECAM-KILLER
Q405
DTA124ES
SECAM-H
Q406
2SC2785
SEC-B-Y-BUFF
L406
10μH
FLR-50
Q410
2SC2785
COL-BLK-2
Q411
2SA1175
COL-BLK-3
PCM290
PHASE-CONT
CHROMA IN
12V
12V
GND
CHROMA OUT
12V
PHASE VC
HUE VC
12V
PAL/NTSC
443/358
GND
RV291
2.2k
B
RV292
2.2k
B
RV290
10k
B
IC210
TC4053BP
Y-SW
Y
OY
OZ
Z-COM
OZ
INH
VEE
VSS
VDD
Y-COM
X-COM
1X
0X
A
B
C
CTR211
Y-TRAP (A)
Vcc
Y-OUT
GND
4.43 SW
4.25 SW
CTR210
Y-TRAP (B)
4.25 SW
4.43 SW
GND
IN
Vcc
Q212
DTC144ES
ARC-SW-1
Q211
2SA1175
TRAP-SW-2
D211
1SS148
TRAP-SW-KIL
Q221
DTC144ES
TRAP-SW
Q214
2SC2785
BIAS
Q213
DTC144ES
ARC-SW-2
Q210
2SC2785
TRAP-SW-1
D210
1SS148
TRAP-SW-50
D212
1SS148
TRAP-SW-443

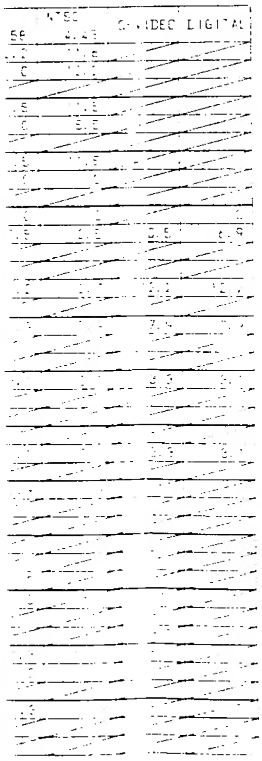

NTSC
C-VIDEO DIGITAL

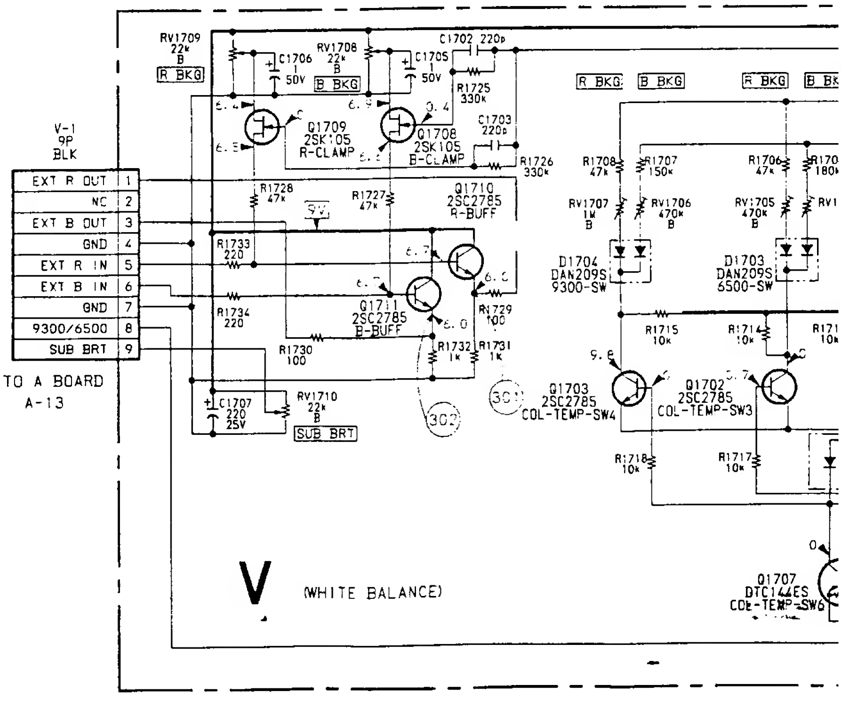

V-1
9P
BLK
EXT R OUT
NC
EXT B OUT
GND
EXT R IN
EXT B IN
GND
9300/6500
SUB BRT
TO A BOARD
A-13
RV1709
22k
B
R BKG
RV1708
22k
B
B BKG
Q1709
2SK105
R-CLAMP
Q1708
2SK105
B-CLAMP
Q1710
2SC2785
R-BUFF
Q1711
2SC2785
B-BUFF
RV1710
22k
B
SUB BRT
R BKG
B BKG
R BKG
B BKG
RV1707
1M
B
RV1706
470k
B
RV1705
470k
B
D1704
DAN209S
9300-SW
D1703
DAN209S
6500-SW
Q1703
2SC2785
COL-TEMP-SW4
Q1702
2SC2785
COL-TEMP-SW3
Q1707
DTC144ES
COL-TEMP-SW6
V
(WHITE BALANCE)

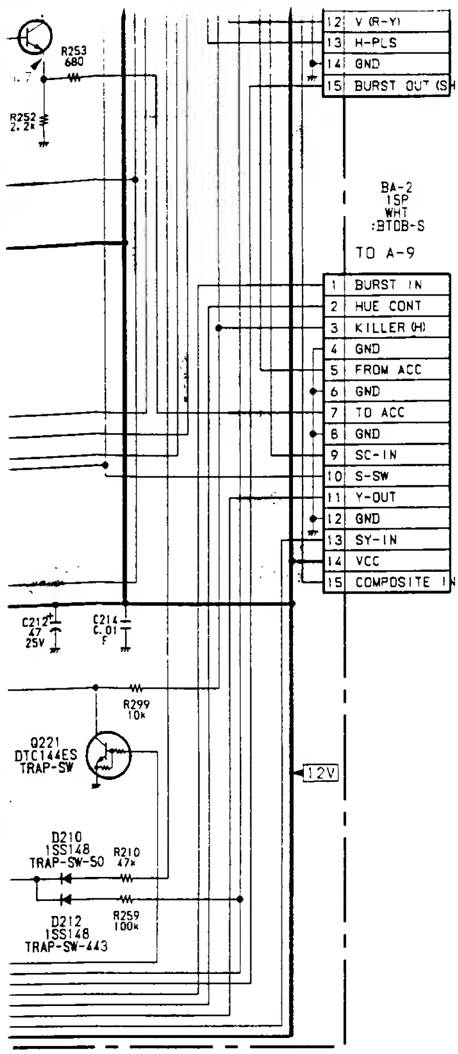
R253
680
R252
2.2k
12 V (R-Y)
13 H-PLS
14 GND
15 BURST OUT (SHIFTED)
BA-2
15P
WHT
:BTOB-S
TO A-9
1 BURST IN
2 HUE CONT
3 KILLER (H)
4 GND
5 FROM ACC
6 GND
7 TO ACC
8 GND
9 SC-IN
10 S-SW
11 Y-OUT
12 GND
13 SY-IN
14 VCC
15 COMPOSITE IN
C212
47
25V
C214
0.01
F
R299
10k
Q221
DTC144ES
TRAP-SW
12V
D210
1SS148
TRAP-SW-50
R210
47k
D212
1SS148
TRAP-SW-443
R259
100k

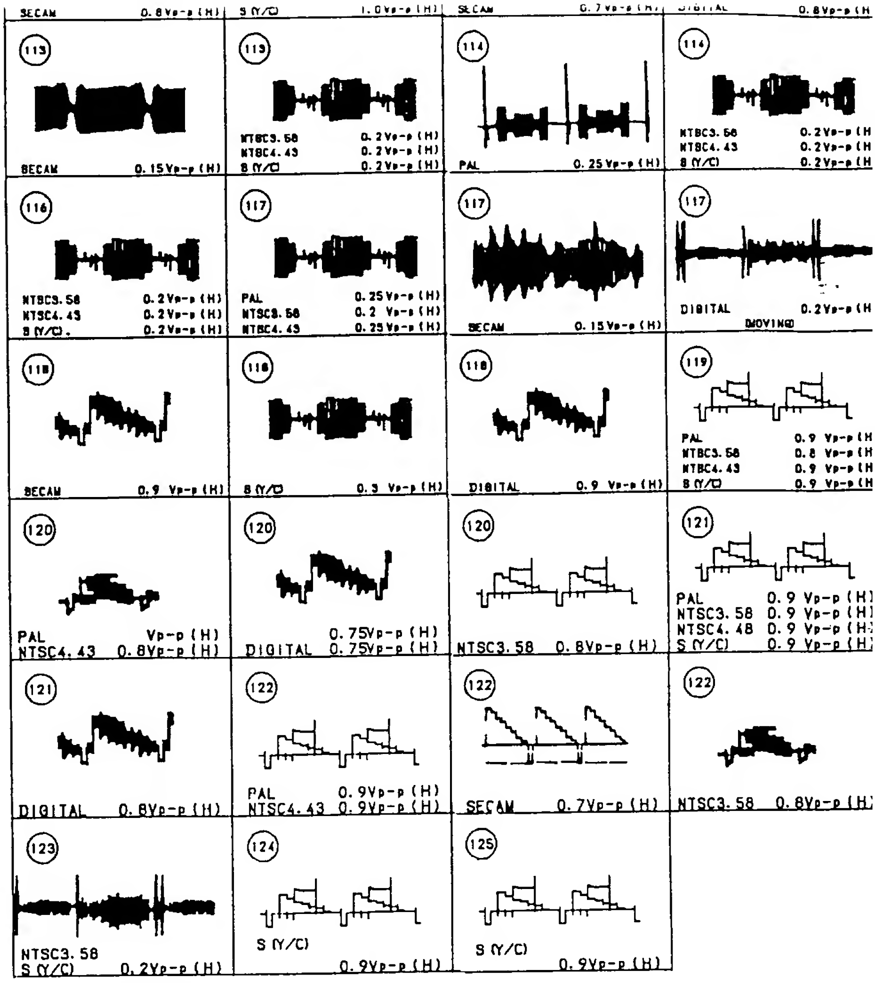

V BOARD WAVEFORM

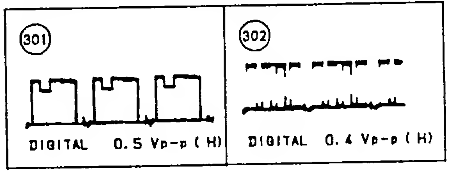

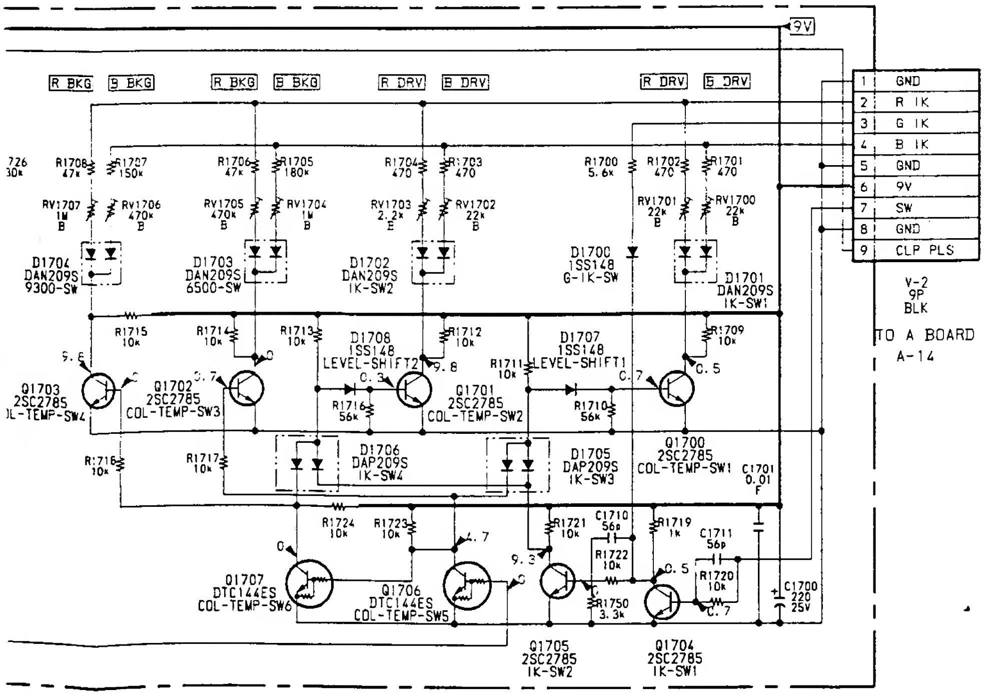
9V
R BKG
B BKG
R BKG
B BKG
R DRV
B DRV
R DRV
B DRV
1 GND
2 R IK
3 G IK
4 B IK
5 GND
6 9V
7 SW
8 GND
9 CLP PLS
V-2
9P
BLK
TO A BOARD
A-14
R1708 47k
R1707 150k
R1706 47k
R1705 180k
R1704 470
R1703 470
R1700 5.6k
R1702 470
R1701 470
RV1707 1M B
RV1706 470k B
RV1705 470k B
RV1704 1M B
RV1703 2.2k E
RV1702 22k B
RV1701 22k B
RV1700 22k B
D1704
DAN209S
9300-SW
D1703
DAN209S
6500-SW
D1702
DAN209S
IK-SW2
D1700
1SS148
G-IK-SW
D1701
DAN209S
IK-SW1
R1715 10k
R1714 10k
R1713 10k
R1712 10k
R1709 10k
D1708
1SS148
LEVEL-SHIFT2
D1707
1SS148
LEVEL-SHIFT1
R1711 10k
R1716 56k
R1710 56k
Q1703
2SC2785
COL-TEMP-SW4
Q1702
2SC2785
COL-TEMP-SW3
Q1701
2SC2785
COL-TEMP-SW2
Q1700
2SC2785
COL-TEMP-SW1
R1718 10k
R1717 10k
D1706
DAP209S
IK-SW4
D1705
DAP209S
IK-SW3
C1701
0.01
F
R1724 10k
R1723 10k
R1721 10k
C1710 56p
R1722 10k
R1719 1k
C1711 56p
R1720 10k
R1750 3.3k
C1700
220
25V
Q1707
DTC144ES
COL-TEMP-SW6
Q1706
DTC144ES
COL-TEMP-SW5
Q1705
2SC2785
IK-SW2
Q1704
2SC2785
IK-SW1

FE BOARD IC601 μPC13

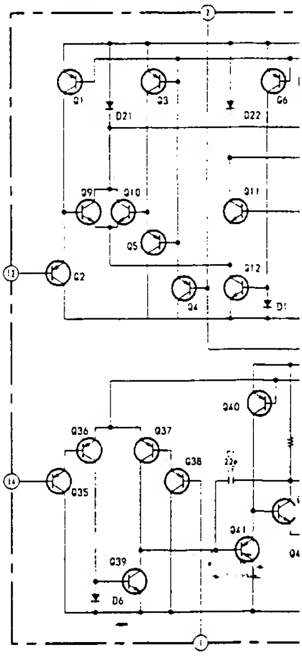
Q1
Q3
Q6
D21
D22
Q9
Q10
Q11
Q5
Q2
Q4
Q40
Q36
Q37
Q38
Q35
Q41
Q39
D6

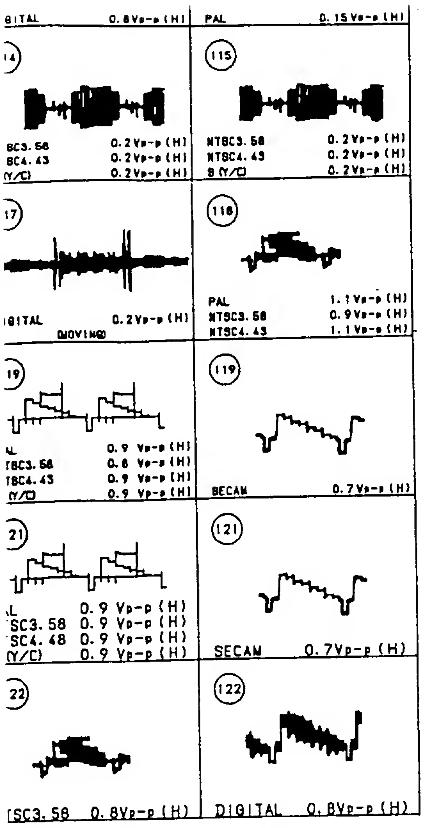

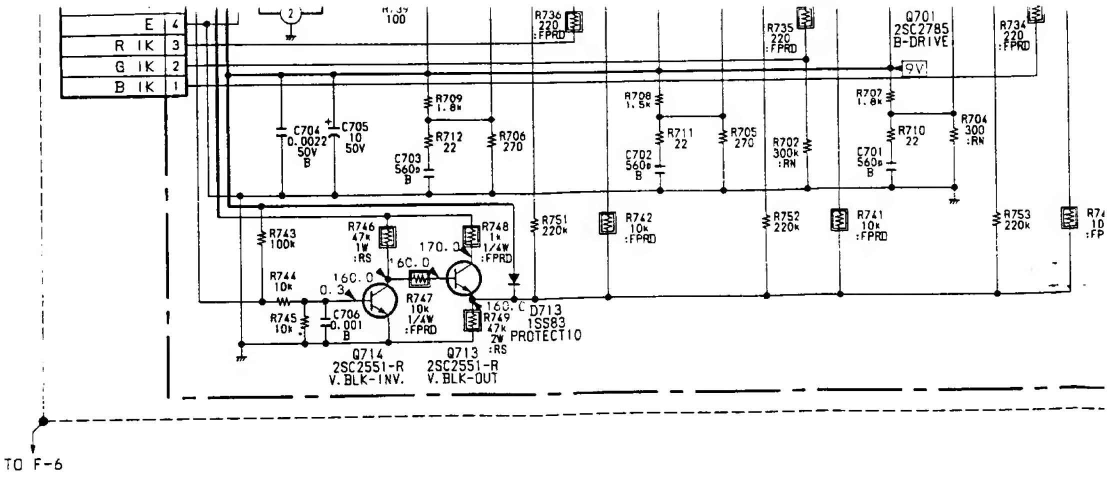

E 4
R IK 3
G IK 2
B IK 1
100
R736 220 :FPRD
R735 220 :FPRD
Q701 2SC2785 B-DRIVE
R734 220 :FPRD
9V
R709 1.8k
R712 22
R706 270
C704 0.0022 50V B
C705 10 50V
C703 560p B
R708 1.5k
R711 22
R705 270
C702 560p B
R702 300k :RN
R707 1.8k
R710 22
R704 300 :RN
C701 560p B
R743 100k
R746 47k 1W :RS
R748 1k 1/4W :FPRD
170.0
160.0
0.3
R744 10k
R745 10k
C706 0.001 B
R747 10k 1/4W :FPRD
R749 47k 2W :RS
160.0
D713 1SS83 PROTECTIO
Q714 2SC2551-R V.BLK-INV.
Q713 2SC2551-R V.BLK-OUT
R751 220k
R742 10k :FPRD
R752 220k
R741 10k :FPRD
R753 220k
TO F-6

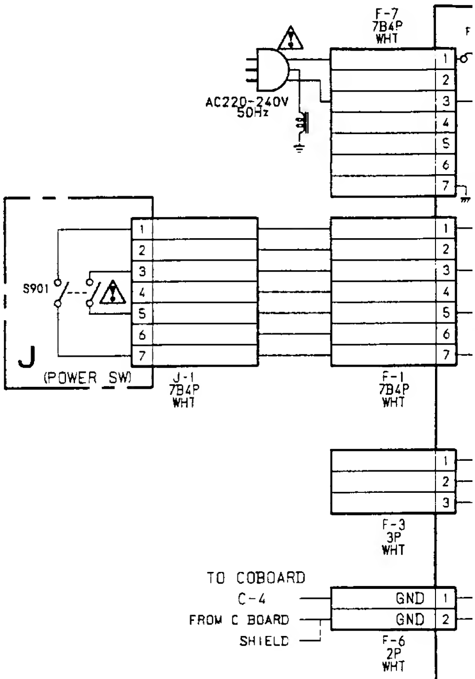

F-7 7B4P WHT
AC220-240V 50Hz
S901
J
(POWER SW)
J-1 7B4P WHT
F-1 7B4P WHT
F-3 3P WHT
TO COBOARD C-4
FROM C BOARD
SHIELD
GND
GND
F-6 2P WHT

D IC601 μPC1394C

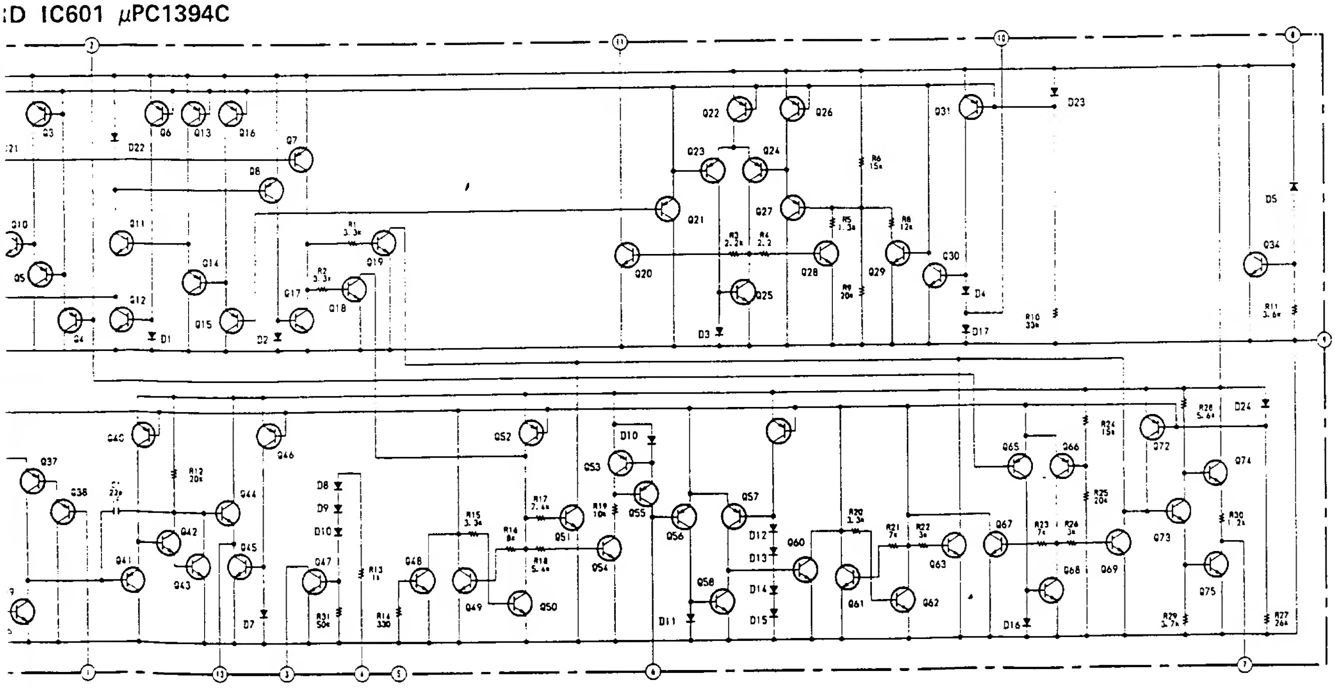

Q3
Q6
Q13
Q16
D22
Q7
Q8
Q10
Q11
Q5
Q14
Q12
Q4
Q15
D1
D2
Q17
Q18
Q19
R1 3.3k
R2 3.3k
Q22
Q26
Q23
Q24
Q21
Q27
Q20
Q28
Q25
Q29
Q30
Q31
D23
D3
D4
D17
D5
Q34
R3 2.2k
R4 2.2
R5 1.3k
R6 15k
R8 12k
R9 20k
R10 33k
R11 3.6k
Q37
Q38
Q40
Q41
Q42
Q43
Q44
Q45
Q46
Q47
Q48
Q49
Q50
Q51
Q52
Q53
Q54
Q55
Q56
Q57
Q58
Q60
Q61
Q62
Q63
Q65
Q66
Q67
Q68
Q69
Q72
Q73
Q74
Q75
D7
D8
D9
D10
D11
D12
D13
D14
D15
D16
D24
R12 20k
R13
R14 330
R15 3.3k
R16 8k
R17 7.6k
R18 5.6k
R19 10k
R20 3.3k
R21 7k
R22 3k
R23 7k
R24 15k
R25 20k
R26 5.6k
R27 26k
R29 3.7k
R30 1.2k
R31 50k

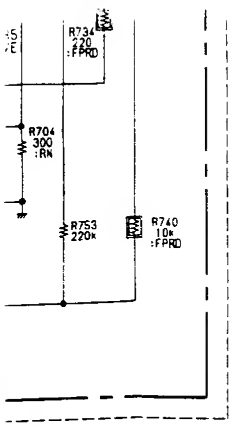
R734
220
:FPRD
R704
300
:RN
R753
220k
R740
10k
:FPRD

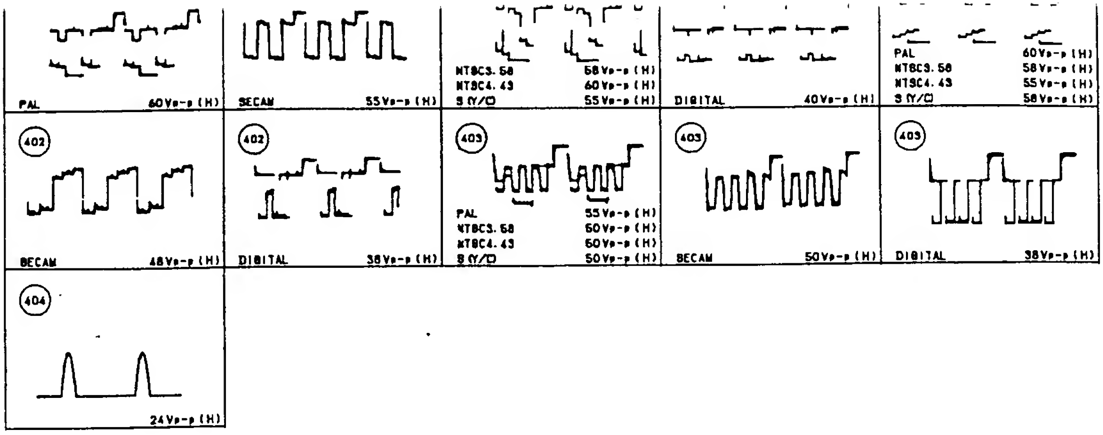
PAL 60Vp-p (H)
SECAM 55Vp-p (H)
NTSC3.58 58Vp-p (H)
NTSC4.43 60Vp-p (H)
S (Y/C) 55Vp-p (H)
DIGITAL 40Vp-p (H)
PAL 60Vp-p (H)
NTSC3.58 58Vp-p (H)
NTSC4.43 55Vp-p (H)
S (Y/C) 58Vp-p (H)
402
SECAM 48Vp-p (H)
402
DIGITAL 38Vp-p (H)
403
PAL 55Vp-p (H)
NTSC3.58 50Vp-p (H)
NTSC4.43 50Vp-p (H)
S (Y/C) 50Vp-p (H)
403
SECAM 50Vp-p (H)
403
DIGITAL 38Vp-p (H)
404
24Vp-p (H)

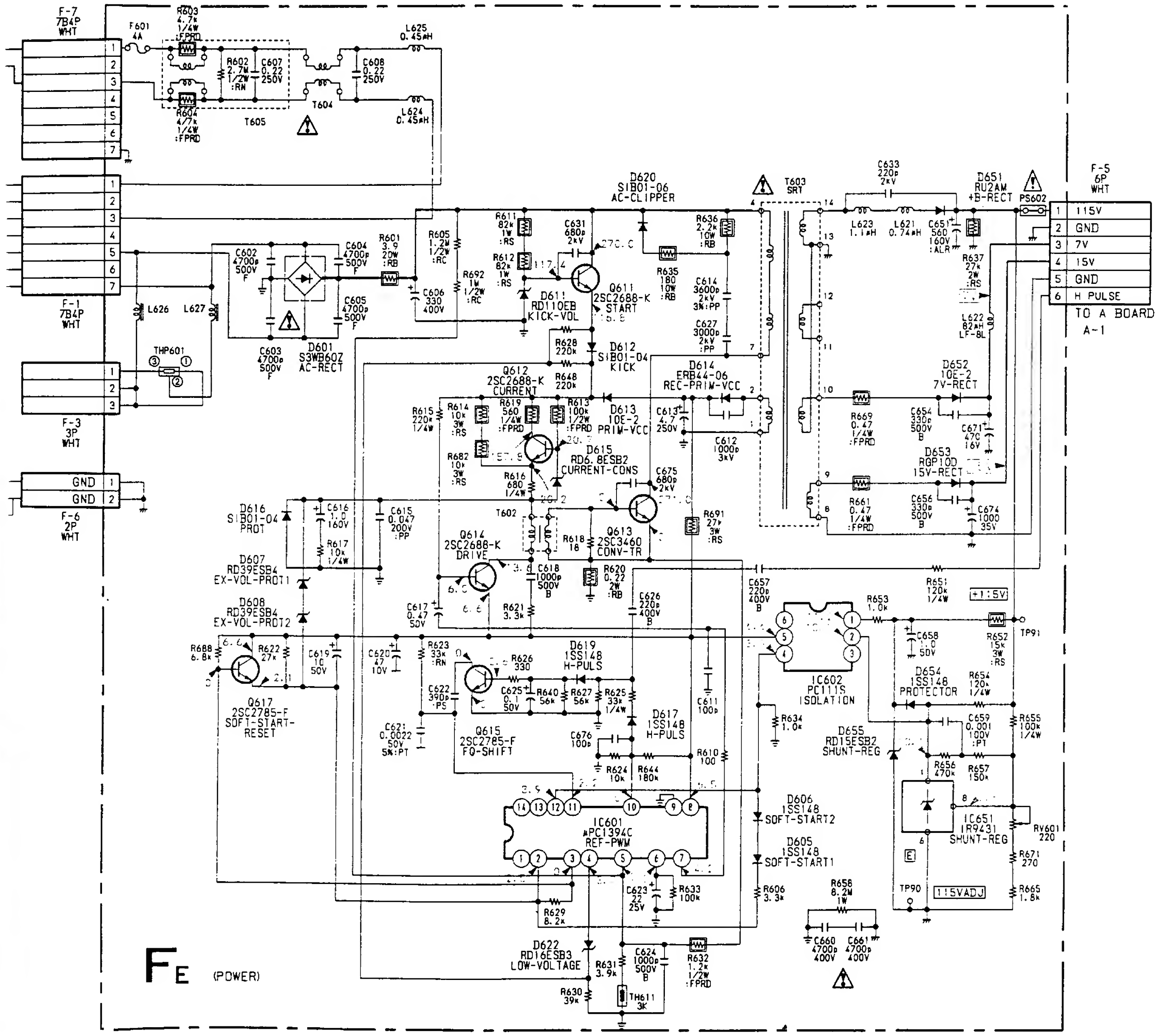
F-7
7B4P
WHT
F601
4A
R603
4.7k
1/4W
:FPRD
R602
2.7M
1/2W
:RN
C607
0.22
250V
C608
0.22
250V
L625
0.45μH
L624
0.45μH
T604
T605
R604
4.7k
1/4W
:FPRD
F-1
7B4P
WHT
L626
L627
C602
4700p
500V
F
C604
4700p
500V
F
C605
4700p
500V
F
C603
4700p
500V
F
D601
S3WB60Z
AC-RECT
R601
3.9
20W
:RB
R605
1.2M
1/2W
:RC
C606
330
400V
THP601
F-3
3P
WHT
GND
GND
F-6
2P
WHT
R611
82k
1W
:RS
R612
82k
1W
:RS
R692
1M
1/2W
:RC
C631
680p
2kV
D611
RD11OEB
KICK-VOL
Q611
2SC2688-K
START
D620
S1B01-06
AC-CLIPPER
R636
2.2k
10W
:RB
R635
180
10W
:RB
C614
3600p
2kV
3%:PP
C627
3000p
2kV
:PP
T603
SRT
C633
220p
2kV
L623
1.1μH
L621
0.74μH
C651
560
160V
:ALR
D651
RU2AM
+B-RECT
PS602
R637
27k
2W
:RS
L622
82μH
LF-8L
F-5
6P
WHT
1 115V
2 GND
3 7V
4 15V
5 GND
6 H PULSE
TO A BOARD
A-1
R628
220k
D612
S1B01-04
KICK
D614
ERB44-06
REC-PRIM-VCC
Q612
2SC2688-K
CURRENT
R648
220k
R615
220k
1/4W
R614
10k
3W
:RS
R619
560
1/4W
:FPRD
R613
100k
1/4W
:FPRD
D613
10E-2
PRIM-VCC
C613
4.7
250V
C612
1000p
3kV
R682
10k
3W
:RS
D615
RD6.8ESB2
CURRENT-CONS
R616
680
1/4W
C675
680p
2kV
R669
0.47
1/4W
:FPRD
C654
330p
500V
B
C671
470
16V
D652
10E-2
7V-RECT
D653
RGP10D
15V-RECT
R661
0.47
1/4W
:FPRD
C656
330p
500V
B
C674
1000
35V
D616
S1B01-04
PROT
C616
1.0
160V
R617
10k
1/4W
C615
0.047
200V
:PP
T602
Q614
2SC2688-K
DRIVE
R618
18
Q613
2SC3460
CONV-TR
R691
27k
3W
:RS
D607
RD39ESB4
EX-VOL-PROT1
D608
RD39ESB4
EX-VOL-PROT2
C618
1000p
500V
B
R620
0.22
2W
:RB
C617
0.47
50V
R621
3.3k
C626
220p
400V
B
C657
220p
400V
R651
120k
1/4W
+15V
R653
1.0k
IC602
PC111S
ISOLATION
C658
1.0
50V
R652
15k
3W
:RS
TP91
R688
6.8k
R622
27k
C619
10
50V
Q617
2SC2785-F
SOFT-START-
RESET
C620
47
10V
R623
33k
:RN
R626
330
D619
1SS148
H-PULS
C622
390p
:PS
C625
0.1
50V
R640
56k
R627
56k
R625
33k
1/4W
C611
100p
D654
1SS148
PROTECTOR
R654
120k
1/4W
C621
0.0022
50V
5%:PT
Q615
2SC2785-F
FQ-SHIFT
C676
100p
D617
1SS148
H-PULS
R634
1.0k
D655
RD15ESB2
SHUNT-REG
C659
0.001
100V
:PT
R655
100k
1/4W
R624
10k
R644
180k
R610
100
R656
470k
R657
150k
IC601
μPC1394C
REF-PWM
D606
1SS148
SOFT-START2
D605
1SS148
SOFT-START1
IC651
IR9431
SHUNT-REG
RV601
220
R671
270
C623
22
25V
R633
100k
R606
3.3k
R658
8.2M
1W
TP90
115VADJ
R665
1.8k
R629
8.2k
C660
4700p
400V
C661
4700p
400V
D622
RD16ESB3
LOW-VOLTAGE
R631
3.9k
C624
1000p
500V
B
R632
1.2k
1/2W
:FPRD
R630
39k
TH611
3K
FE (POWER)

F
G
H
I
J
K
L
M
N
O
P

BA [CHROMA FOR 4 SYSTEM] **J** [POWER SW]

— BA Board —

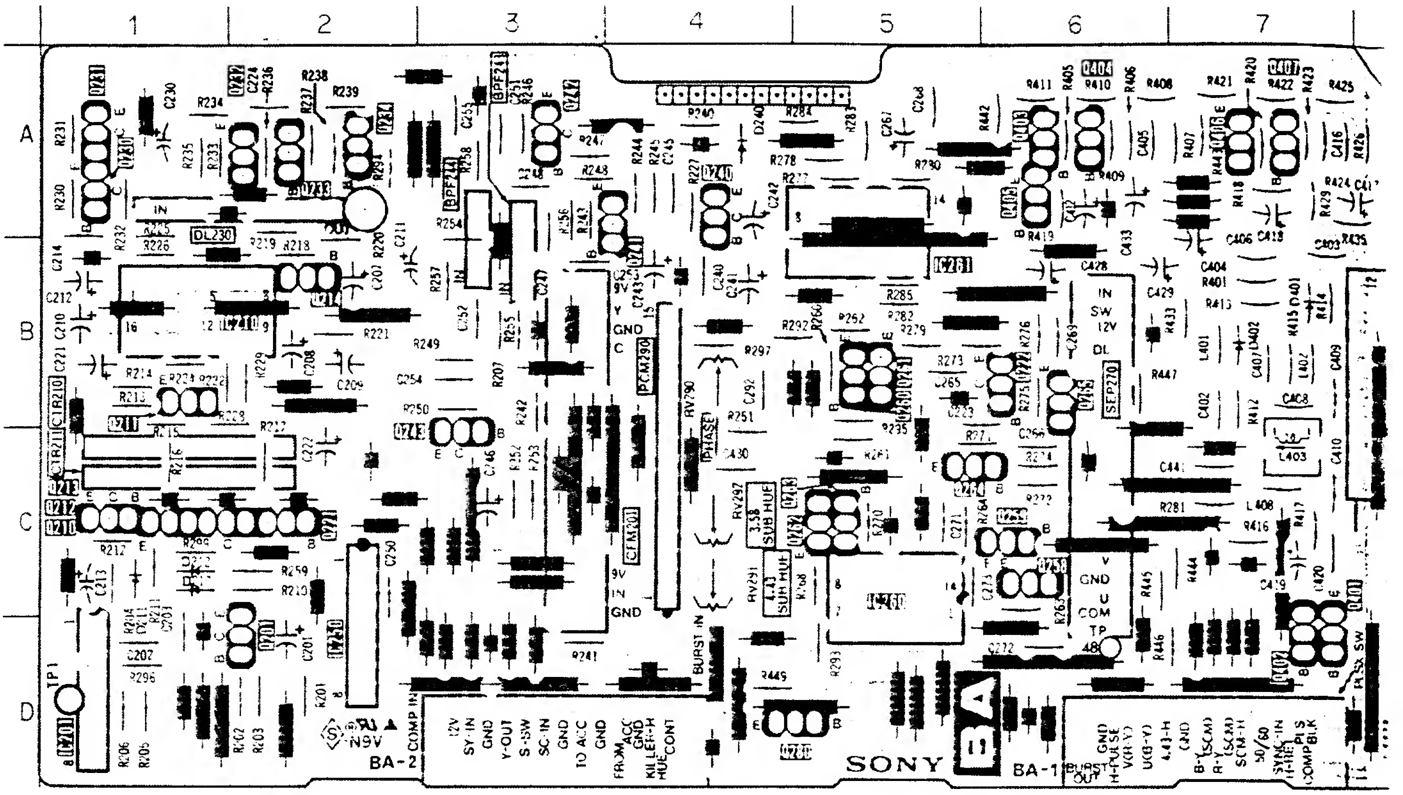
1
2
3
4
5
6
7
A
B
C
D
IC210
IC260
IC261
IC230
IC201
Q210
Q211
Q212
Q213
Q221
Q230
Q231
Q232
Q233
Q234
Q240
Q241
Q242
Q243
Q250
Q251
Q260
Q262
Q270
Q271
Q272
Q401
Q402
Q403
Q404
Q405
Q406
Q407
DL230
BPF241
BPF242
CFM201
PCM290
RV290
PHASE
RV291
SUB HUE 4.43
RV292
SUB HUE 3.58
SEP270
DL
IN
SW
12V
GND
Y
C
9V
BURST IN
TP1
TP48
COMP IN
12V
SY-IN
GND
Y-OUT
S-SW
SC-IN
GND
TO ACC
GND
FROM ACC
GND
KILLER-H
HUE CONT
BA-2
BA-1
BURST OUT
GND
H-PULSE
V(R-Y)
U(B-Y)
4.43-H
GND
B-Y (SCM)
R-Y (SCM)
SCM-H
50/60
SYNC-IN (H-REF)
COMP BLK
PLS
SX SW
N9V
SONY
BA

— J Board —

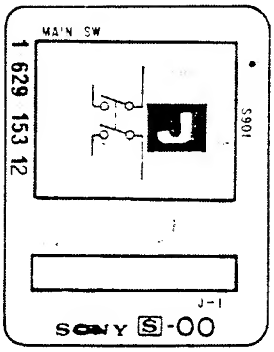
MAIN SW
1 629 153 12
S901
J
J-1
SONY S-00

J [POWER SW]

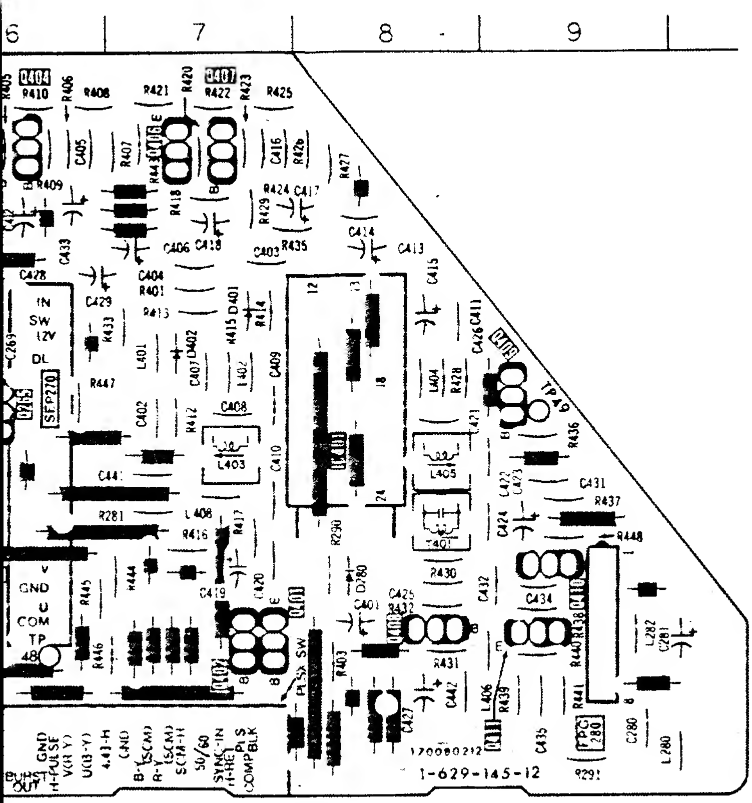
6
7
8
9
Q404
R410
R406
R408
R421
R420
Q407
R422
R423
R425
C405
R407
R416
R418
R409
R424
C417
R427
R429
R435
C406
C418
C403
C414
C413
C415
C433
C428
C404
R401
C429
R413
IN
SW
12V
DL
R433
L401
D401
R414
R415
C407
Q402
L402
C409
C411
C426
L404
R428
Q410
TP49
R436
SFP270
R447
C402
R412
C408
L403
C410
IC401
L405
R421
C422
C423
C431
R437
C441
R281
L408
R416
R417
R230
T401
C424
R448
R430
C432
C434
GND
COM
TP
48
R445
R444
C419
C420
D280
C401
C425
R432
Q408
Q411
L282
C281
R446
Q409
PLSX SW
R403
R431
C442
L406
R439
R440
R438
R441
C427
C435
FPC
280
C280
L280
GND
H-PULSE
V(R-Y)
U(B-Y)
4.43-H
GND
B-Y (S(M))
R-Y (S(M))
SCAN-H
50/60
SYNC-IN
H-RE
PLS
COMP BLK
BURST OUT
170080212
1-629-145-12
9291

BA Board

IC	
IC201	D-1
IC210	B-1
IC250	D-2
IC260	C-5
IC261	B-5
IC401	B-8

TRANSISTOR	
Q201	D-2
Q210	C-1
Q211	B-1
Q212	C-1
Q213	C-1
Q214	B-2
Q221	C-2
Q222	B-6
Q230	A-1
Q231	A-1
Q232	A-2
Q233	A-2
Q234	A-2
Q241	A-4
Q242	A-3
Q243	C-3
Q258	C-6
Q259	C-6
Q260	B-5
Q261	B-5
Q262	C-5
Q263	C-5
Q264	C-5
Q265	B-6
Q280	D-5
Q401	D-7
Q402	D-7
Q403	A-6
Q404	A-6
Q405	A-6
Q406	A-7
Q407	A-7
Q408	D-8
Q409	B-9
Q410	C-9
Q411	D-9

DIODE	
D210	C-1
D211	C-1
D212	C-1
D240	A-4
D280	C-8
D401	B-7
D402	B-7

VARIABLE RESISTOR	
RV290	B-4
RV291	C-4
RV292	C-4

ODE
C-1
C-1
C-1
A-4
C-8
B-7
B-7
IABLE ISTOR
B-4
C-4
C-4

— FE Board —

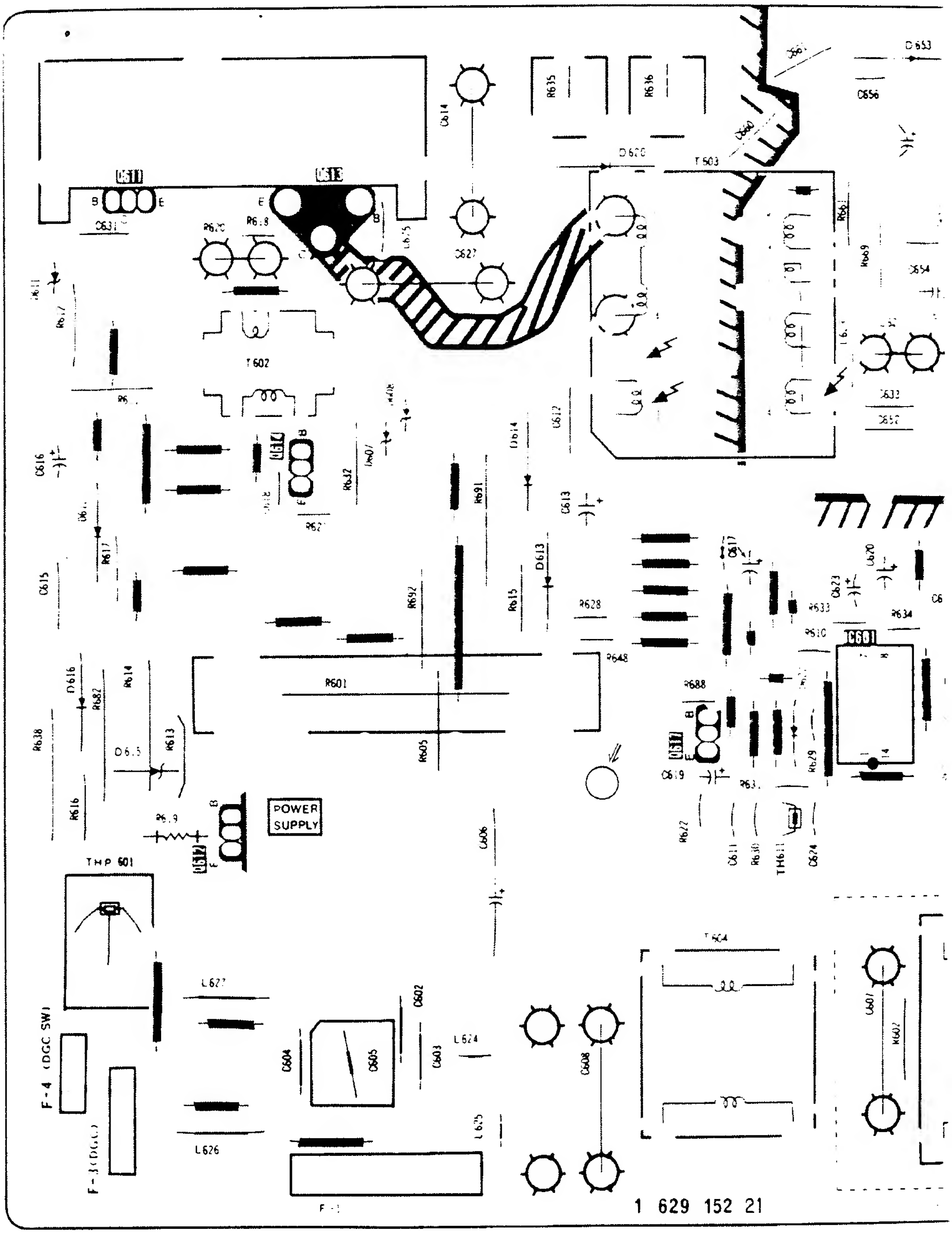
Q611
Q613
IC601
Q614
Q612
Q617
T602
T603
T604
R601
R605
R615
R616
R628
R648
R688
D653
C656
POWER SUPPLY
THP 601
F-4 (DGC SW)
F-3 (DGC)
F-1
L624
L625
L626
L627
C602
C603
C604
C605
C606
C608
C614
C627
D616
D615
D614
D613
D620
TH611
1 629 152 21

FE [POWER]

C [R·G·B OUT]

V [WHITE BALANCE]

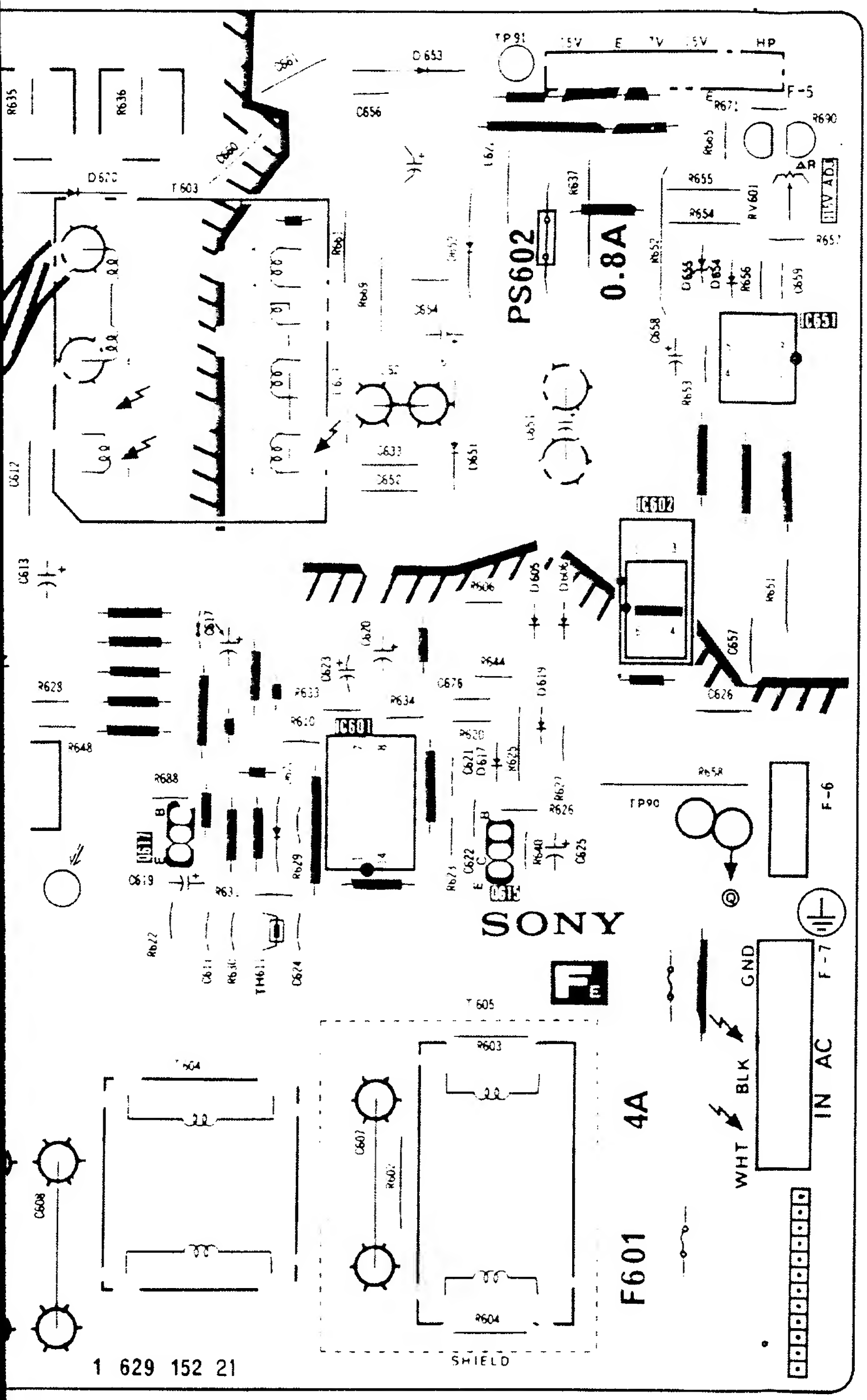
TP91
15V
E
7V
15V
HP
F-5
D653
PS602
0.8A
+B V ADJ
RV601
IC651
IC602
IC601
T603
D670
TP90
SONY
FE
F-6
F-7
GND
AC
IN
BLK
WHT
4A
F601
T604
T605
R603
R604
SHIELD
TH611
1 629 152 21

— C Board —

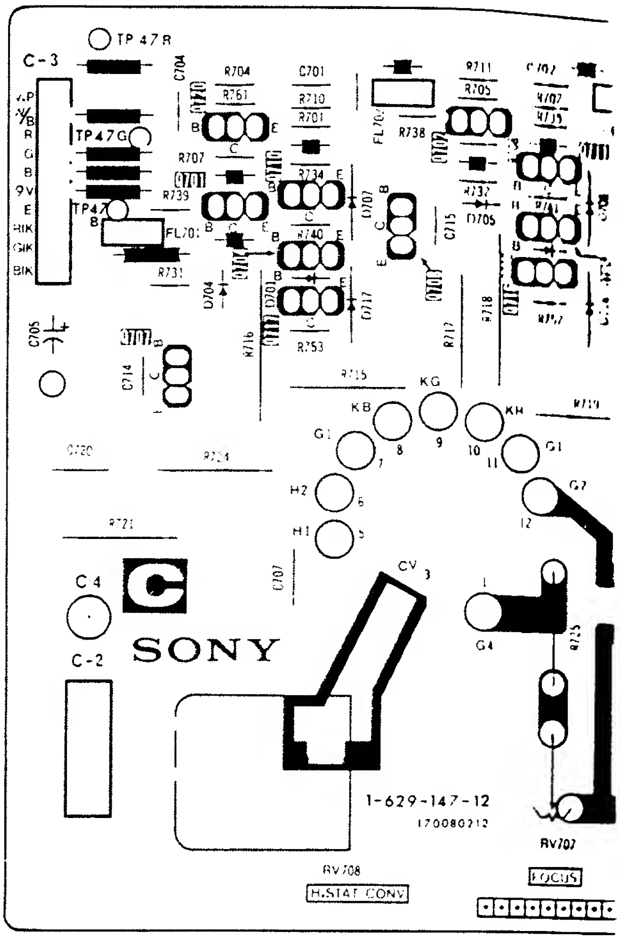
TP47R
C-3
TP47G
TP47B
IC701
C-4
C-2
C
SONY
KB
KG
KR
G1
G2
H1
H2
CV
G4
1-629-147-12
170080212
RV708
H.STAT CONV
RV707
FOCUS

— V Board —

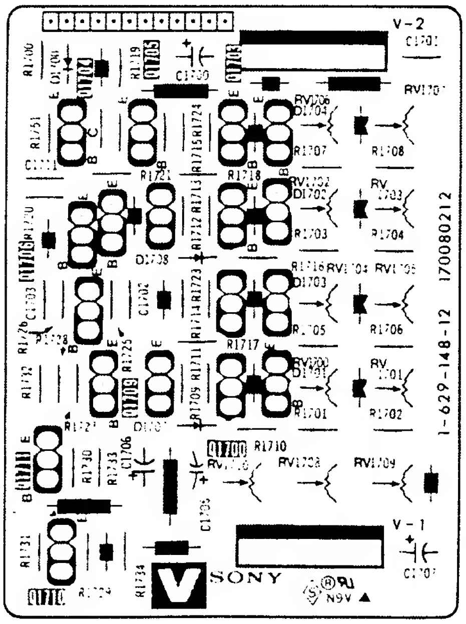
V-2
V-1
1-629-148-12
170080212
V
SONY
N9V

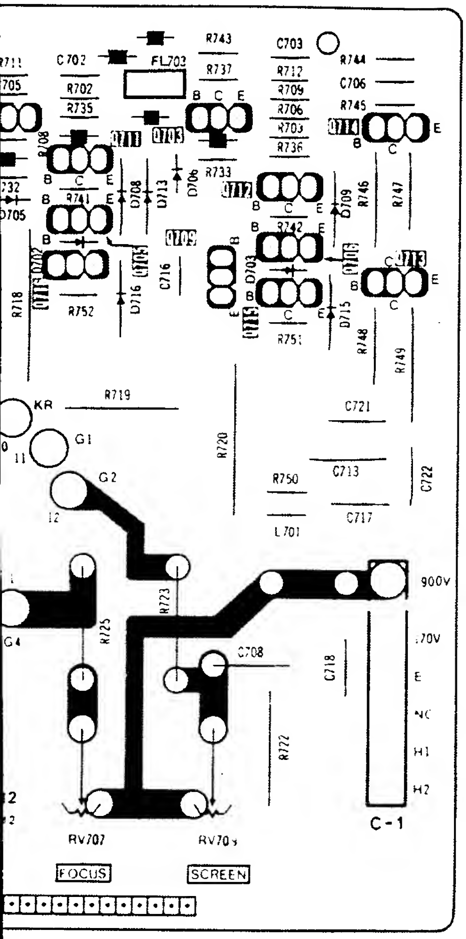
C702
FL703
R743
R737
C703
R744
C706
R745
R702
R735
R712
R709
R706
R703
R736
R733
R741
R742
D705
D706
D708
D709
D713
D715
D716
C716
R746
R747
R748
R749
R718
R752
R751
R719
R720
R750
L701
C721
C713
C717
C722
KR
G1
G2
G4
R723
R725
C708
C718
R722
900V
170V
E
NC
H1
H2
C-1
RV707
RV703
FOCUS
SCREEN
B
C
E

For Service Manuals
MAURITRON SERVICES
8 Cherry Tree Road, Chinnor
Oxfordshire, OX9 4QY.
Tel (01844) 351694
Fax (01844) 352554
email:- mauritron@dial.pipex.com

(QA, QB Board: PVM-1444QM)

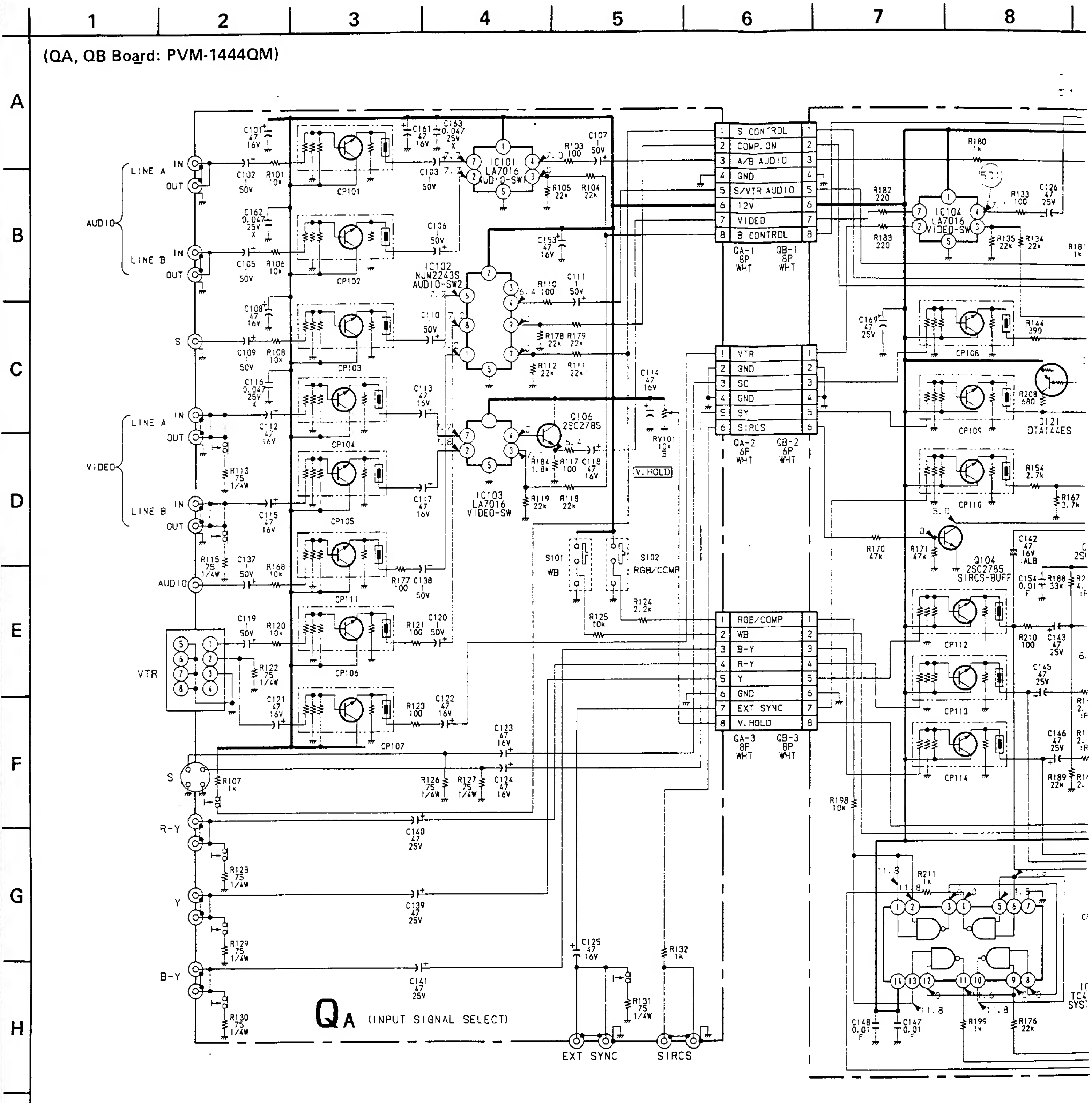

1
2
3
4
5
6
7
8
A
B
C
D
E
F
G
H
I
J
AUDIO
LINE A
LINE B
IN
OUT
S
VIDEO
AUDIO
VTR
S
R-Y
Y
B-Y
CP101
CP102
CP103
CP104
CP105
CP111
CP106
CP107
IC101 LA7016 AUDIO-SW1
IC102 NJM2243S AUDIO-SW2
IC103 LA7016 VIDEO-SW
Q106 2SC2785
RV101 10k B
V. HOLD
S101 WB
S102 RGB/COMP
S CONTROL
COMP. ON
A/B AUDIO
GND
S/VTR AUDIO
12V
VIDEO
B CONTROL
QA-1 8P WHT
QB-1 8P WHT
VTR
SC
SY
SIRCS
QA-2 6P WHT
QB-2 6P WHT
RGB/COMP
WB
B-Y
R-Y
Y
EXT SYNC
V. HOLD
QA-3 8P WHT
QB-3 8P WHT
IC104 LA7016 VIDEO-SW
CP108
CP109
CP110
CP112
CP113
CP114
Q121 DTA144ES
Q104 2SC2785 SIRCS-BUFF
EXT SYNC
SIRCS
QA (INPUT SIGNAL SELECT)

QB BOARD

IC·NO	PIN·NO	PAL	SECAM	NTSC 3.58	NTSC 4.43	S-VIDEO
IC104	②	7.8	7.8	7.8	7.8	7.7
	③	0.7	0.7	0.7	0.7	5.6
	⑦	7.7	7.7	7.7	7.7	7.8
IC105	②	7.8	7.8	7.8	7.8	7.7
	③	0.5	0.5	0.5	0.5	5.3
	⑦	7.7	7.7	7.7	7.7	7.8
IC106	⑦	0.4	0.4	0.4	0.4	3.3

Q NO.		PAL	SECAM	NTSC 3.58	NTSC 4.43	S-VIDEO
Q103	B	1.9	1.9	1.9	1.9	11.3
	C					
	E	1.3	1.3	1.3	1.3	10.6
Q120	B	1.3	1.3	1.3	1.3	11.3
	C	11.8	11.8	11.8	11.8	4.7
	E					

QB BOARD WA

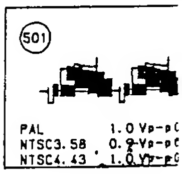

501
PAL 1.0 Vp-p
NTSC3.58 0.9 Vp-p
NTSC4.43 1.0 Vp-p

(QC, QD, QE Board: PVM-1442QM)

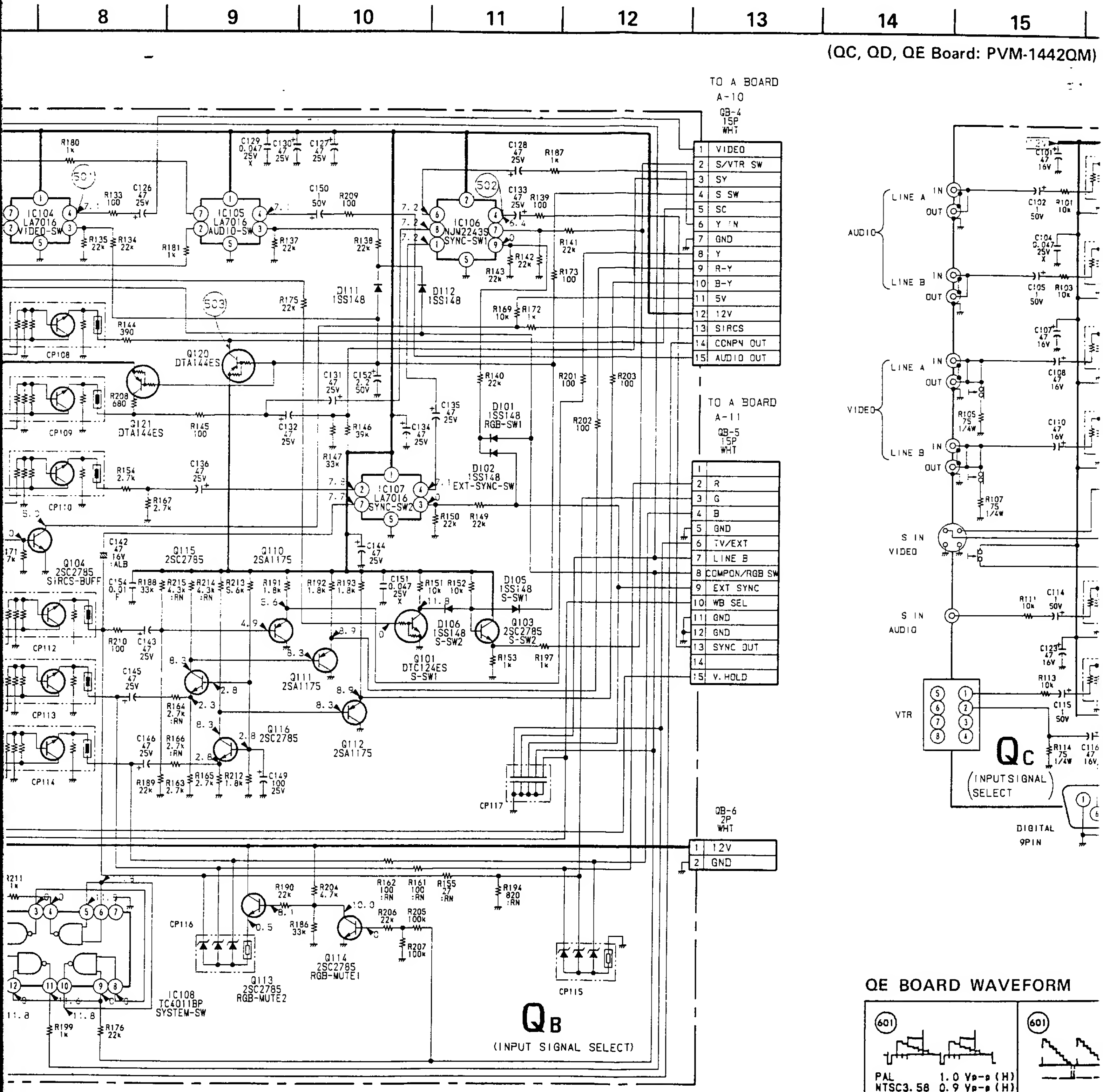
8
9
10
11
12
13
14
15
TO A BOARD
A-10
QB-4
15P
WHT
1 VIDEO
2 S/VTR SW
3 SY
4 S SW
5 SC
6 Y IN
7 GND
8 Y
9 R-Y
10 B-Y
11 5V
12 12V
13 SIRCS
14 CONPN OUT
15 AUDIO OUT
TO A BOARD
A-11
QB-5
15P
WHT
1
2 R
3 G
4 B
5 GND
6 TV/EXT
7 LINE B
8 COMPON/RGB SW
9 EXT SYNC
10 WB SEL
11 GND
12 GND
13 SYNC OUT
14
15 V.HOLD
QB-6
2P
WHT
1 12V
2 GND
IC104
LA7016
VIDEO-SW
IC105
LA7016
AUDIO-SW
IC106
NJM2243S
SYNC-SW1
IC107
LA7016
SYNC-SW2
IC108
TC4011BP
SYSTEM-SW
Q120
DTA144ES
Q121
DTA144ES
Q104
2SC2785
SIRCS-BUFF
Q115
2SC2785
Q110
2SA1175
Q111
2SA1175
Q116
2SC2785
Q112
2SA1175
Q101
DTC124ES
S-SW1
Q103
2SC2785
S-SW2
Q113
2SC2785
RGB-MUTE2
Q114
2SC2785
RGB-MUTE1
D111
1SS148
D112
1SS148
D101
1SS148
RGB-SW1
D102
1SS148
EXT-SYNC-SW
D105
1SS148
S-SW1
D106
1SS148
S-SW2
CP108
CP109
CP110
CP112
CP113
CP114
CP115
CP116
CP117
501
502
503
QB
(INPUT SIGNAL SELECT)
AUDIO
LINE A
LINE B
IN
OUT
VIDEO
S IN
VIDEO
S IN
AUDIO
VTR
DIGITAL
9PIN
QC
(INPUT SIGNAL SELECT)

QB BOARD WAVEFORM

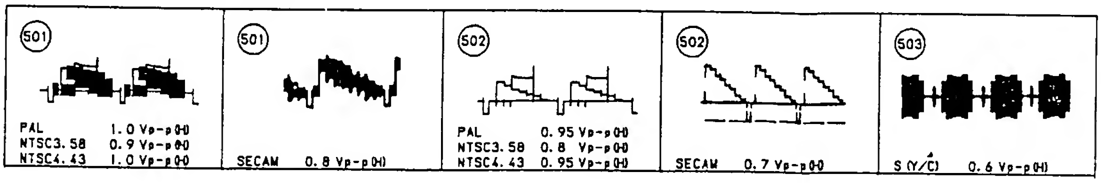
501
PAL 1.0 Vp-p(H)
NTSC3.58 0.9 Vp-p(H)
NTSC4.43 1.0 Vp-p(H)
501
SECAM 0.8 Vp-p(H)
502
PAL 0.95 Vp-p(H)
NTSC3.58 0.8 Vp-p(H)
NTSC4.43 0.95 Vp-p(H)
502
SECAM 0.7 Vp-p(H)
503
S (Y/C) 0.6 Vp-p(H)

QE BOARD WAVEFORM

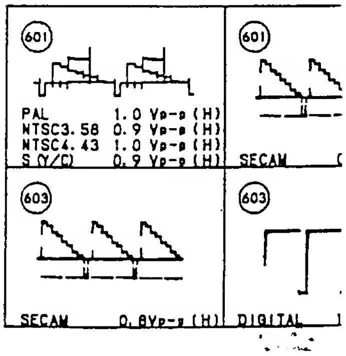
601
PAL 1.0 Vp-p (H)
NTSC3.58 0.9 Vp-p (H)
NTSC4.43 1.0 Vp-p (H)
S (Y/C) 0.9 Vp-p (H)
601
SECAM
603
SECAM 0.8Vp-p (H)
603
DIGITAL

QD, QE Board: PVM-1442QM)

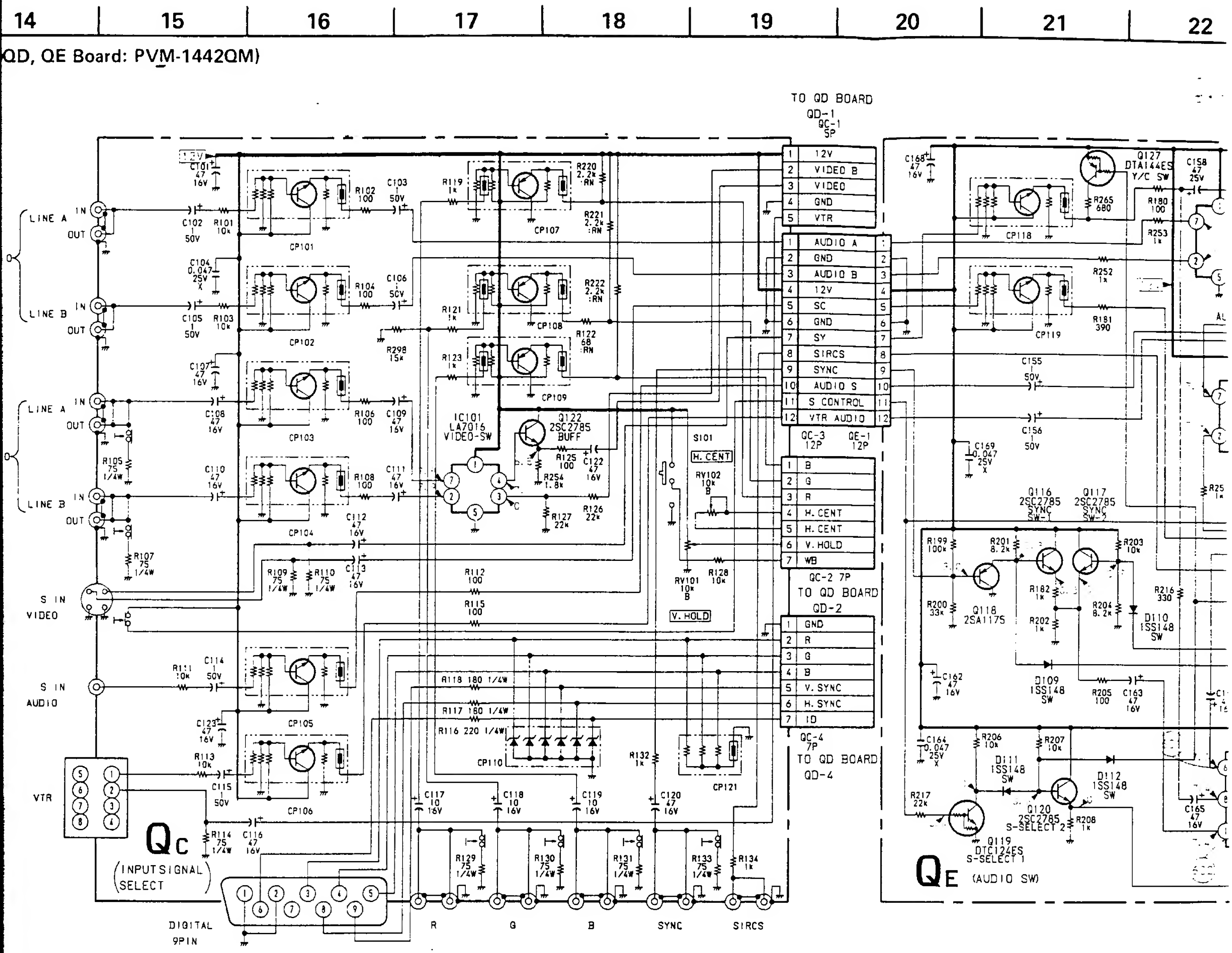
14
15
16
17
18
19
20
21
22
TO QD BOARD
QD-1
QC-1
5P
12V
VIDEO B
VIDEO
GND
VTR
AUDIO A
GND
AUDIO B
12V
SC
GND
SY
SIRCS
SYNC
AUDIO S
S CONTROL
VTR AUDIO
QC-3 12P
QE-1 12P
B
G
R
H. CENT
H. CENT
V. HOLD
WB
QC-2 7P
TO QD BOARD
QD-2
GND
R
G
B
V. SYNC
H. SYNC
ID
QC-4
7P
TO QD BOARD
QD-4
LINE A
LINE B
IN
OUT
S IN VIDEO
S IN AUDIO
VTR
CP101
CP102
CP103
CP104
CP105
CP106
CP107
CP108
CP109
CP110
CP121
CP118
CP119
IC101
LA7016
VIDEO-SW
Q122
2SC2785
BUFF
S101
H. CENT
RV102
10k
B
RV101
10k
B
V. HOLD
Q116
2SC2785
SYNC
SW-1
Q117
2SC2785
SYNC
SW-2
Q118
2SA1175
Q119
DTC124ES
S-SELECT 1
Q120
2SC2785
S-SELECT 2
Q127
DTA144ES
Y/C SW
D109
1SS148
SW
D110
1SS148
SW
D111
1SS148
SW
D112
1SS148
SW
Qc
(INPUT SIGNAL SELECT)
QE
(AUDIO SW)
DIGITAL
9PIN
R
G
B
SYNC
SIRCS
12V

E BOARD WAVEFORM

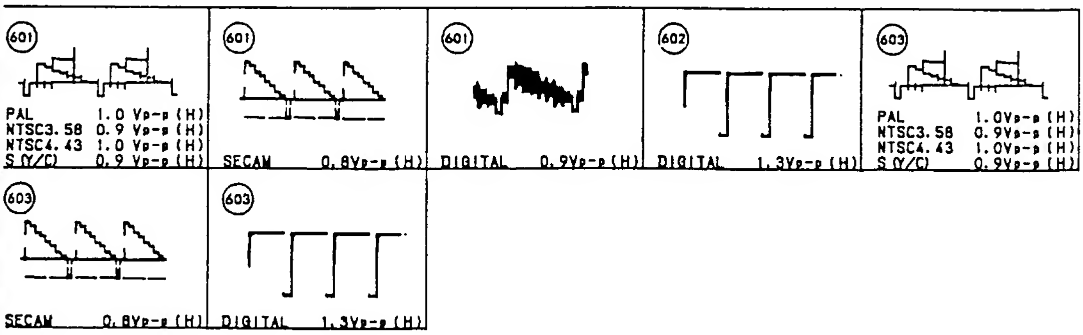

QD BOARD

IC NO	PIN NO	PAL	SECAM	NTSC 3.58
IC104	[illegible]	5.0	5.0	5.0
	(3)	4.5	4.5	4.5
	(5)(9)	0	0	0
	[illegible]	0.8	0.8	0.8
	[illegible]	4.[illegible]	4.[illegible]	4.[illegible]
	[illegible]	5.0	5.0	5.0
IC105	(3)	0.4	0.5	0.5
	(5)	0	0	0
	[illegible]	0.5	0.5	0.5
	(2)	0	0	0
IC106	(3)	0	0	0
IC107	(2)(6)	0	0	0
	(5)	0.2	0.3	0.5
	(4)	4.5	4.5	4.5
	(7)	0	0	0
	(9)	0	0	0

Q NO.		PAL	SECAM	NTSC 3.58
[illegible]	B	1.5	1.5	1.5
	[illegible]			
	[illegible]	[illegible]	[illegible]	0.9
[illegible]	[illegible]	[illegible]	[illegible]	[illegible]
	[illegible]	[illegible]	[illegible]	2.9
[illegible]	[illegible]			
	[illegible]	[illegible]	[illegible]	0.5
	[illegible]			0

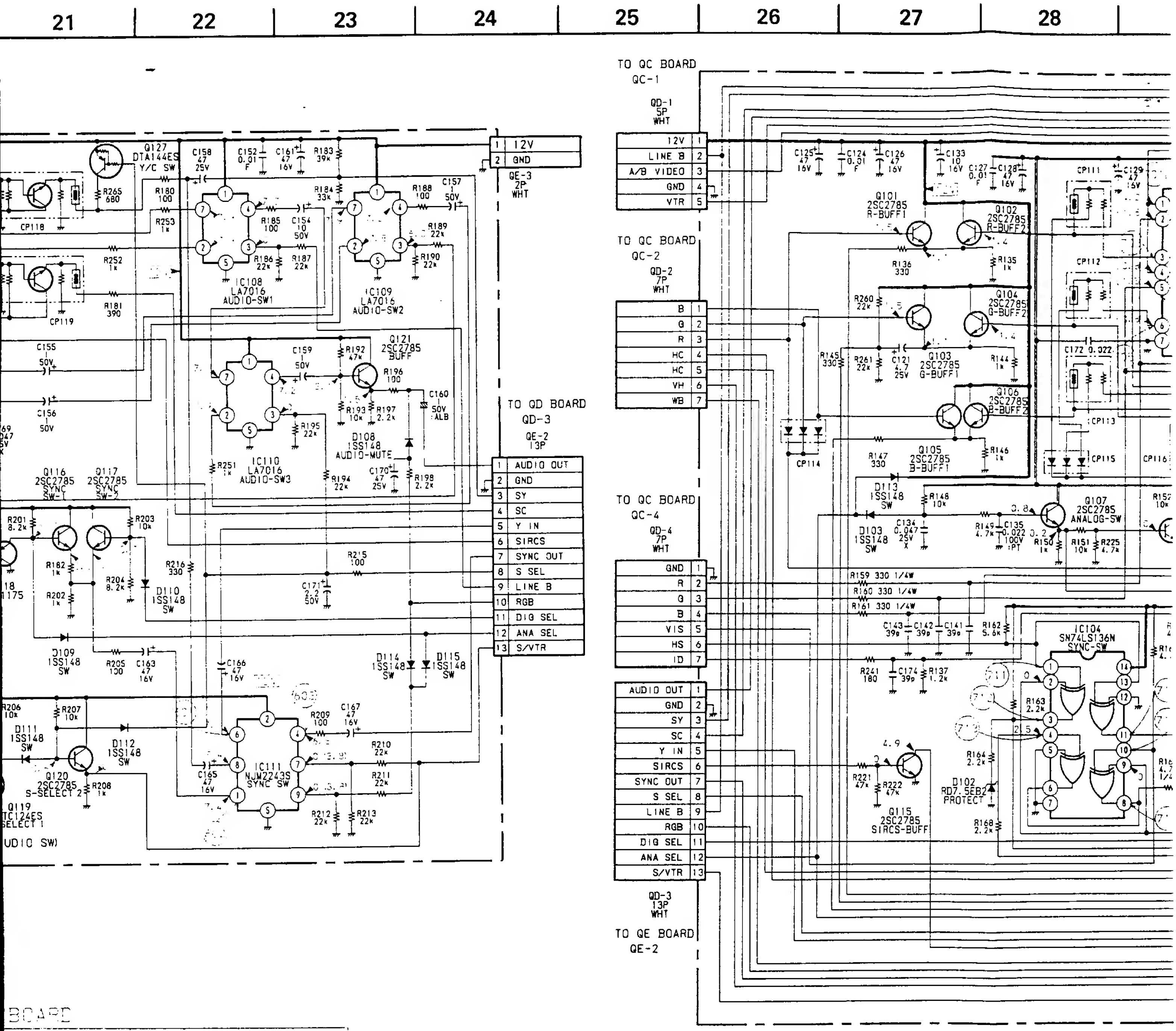
21
22
23
24
25
26
27
28
Q127 DTA144ES Y/C SW
C158 47 25V
C152 0.01 F
C161 47 16V
R183 39k
R265 680
R180 100
R253 1k
R184 33k
R185 100
C154 10 50V
R186 22k
R187 22k
R188 100
C157 1 50V
R189 22k
R190 22k
R252 1k
R181 390
CP118
CP119
IC108 LA7016 AUDIO-SW1
IC109 LA7016 AUDIO-SW2
12V
GND
QE-3 2P WHT
C155 1 50V
C156 1 50V
C159 1 50V
R192 47k
Q121 2SC2785 BUFF
R196 100
C160 1 50V :ALB
R193 10k
R197 2.2k
R195 22k
D108 1SS148 AUDIO-MUTE
IC110 LA7016 AUDIO-SW3
R251 1k
R194 22k
C170 47 25V
R198 2.2k
TO QD BOARD QD-3
QE-2 13P
AUDIO OUT
GND
SY
SC
Y IN
SIRCS
SYNC OUT
S SEL
LINE B
RGB
DIG SEL
ANA SEL
S/VTR
Q116 2SC2785 SYNC SW-1
Q117 2SC2785 SYNC SW-2
R201 8.2k
R203 10k
R182 1k
R204 8.2k
D110 1SS148 SW
R216 330
R215 100
C171 2.2 50V
R202 1k
D109 1SS148 SW
R205 100
C163 47 16V
C166 47 16V
D114 1SS148 SW
D115 1SS148 SW
R206 10k
R207 10k
D111 1SS148 SW
D112 1SS148 SW
Q120 2SC2785 S-SELECT 2
R208 1k
Q119 DTC124ES S-SELECT 1
C165 47 16V
IC111 NJM2243S SYNC SW
R209 100
C167 47 16V
R210 22k
R211 22k
R212 22k
R213 22k
AUDIO SW)
TO QC BOARD QC-1
QD-1 5P WHT
12V
LINE B
A/B VIDEO
GND
VTR
TO QC BOARD QC-2
QD-2 7P WHT
B
G
R
HC
HC
VH
WB
TO QC BOARD QC-4
QD-4 7P WHT
GND
R
G
B
VIS
HS
ID
AUDIO OUT
GND
SY
SC
Y IN
SIRCS
SYNC OUT
S SEL
LINE B
RGB
DIG SEL
ANA SEL
S/VTR
QD-3 13P WHT
TO QE BOARD QE-2
C125 47 16V
C124 0.01 F
C126 47 16V
C133 10 16V
C127 0.01 F
C128 47 16V
C129 47 16V
CP111
CP112
CP113
CP114
CP115
CP116
Q101 2SC2785 R-BUFF1
Q102 2SC2785 R-BUFF2
R136 330
R135 1k
R260 22k
Q104 2SC2785 G-BUFF2
R145 330
R261 22k
C121 4.7 25V
Q103 2SC2785 G-BUFF1
R144 1k
Q106 2SC2785 B-BUFF2
C172 0.022
R147 330
Q105 2SC2785 B-BUFF1
R146 1k
D113 1SS148 SW
R148 10k
Q107 2SC2785 ANALOG-SW
D103 1SS148 SW
C134 0.047 25V
R149 4.7k
C135 0.022 100V :PT
R150 1k
R151 10k
R225 4.7k
R159 330 1/4W
R160 330 1/4W
R161 330 1/4W
C143 39p
C142 39p
C141 39p
R162 5.6k
IC104 SN74LS136N SYNC-SW
R241 180
C174 39p
R137 1.2k
R163 2.2k
R164 2.2k
R221 47k
R222 47k
Q115 2SC2785 SIRCS-BUFF
D102 RD7.5EB2 PROTECT
R168 2.2k
711
712
713
4.9
2.5
0.8
3.2
0.2

BOARD

PIN NO	PAL	SECAM	NTSC 3.58	NTSC 4.43	S-V DEO
①	5.0	5.0	5.0	3.4	3.5
③	4.5	4.6	4.5	4.5	4.2
[illegible]	0	0	0	0	4.5
⑩	0.8	0.8	0.8	3.2	3.3
⑪	4.1	4.1	4.1	4.1	3.9
⑬	5.0	5.0	5.0	3.5	3.5
③	0.4	0.5	0.5	0.5	4.8
⑥	0	0	0	0	5.0
[illegible]	0.5	0.5	0.5	0.5	4.8
⑦	0	0	0	0	4.3
④	0	0	0	5.8	0
[illegible]	0	0	0	0	1.8
③	0.2	0.3	0.5	0.3	0.7
⑥	4.5	4.5	4.5	4.5	4.2
⑦	0	0	0	0	0.6
⑧	0	0	0	0	1.5

NO.	PAL	SECAM	NTSC 3.58	NTSC 4.43	S-VIDEO	DIGITAL
B	1.5	1.5	1.5	1.5	1.5	1.8
[illegible]						
[illegible]	0.9	0.9	0.9	0.9	0.9	1.1
B	1.4	1.4	1.4	1.4	1.4	1.8
[illegible]						
[illegible]	0.9	0.9	0.9	0.9	0.9	[illegible]
[illegible]						
[illegible]	[illegible]	[illegible]	[illegible]	0.5	0.5	4.2
[illegible]						
[illegible]	[illegible]	[illegible]	[illegible]	[illegible]	[illegible]	[illegible]
[illegible]	[illegible]	[illegible]	[illegible]	[illegible]	[illegible]	[illegible]
[illegible]	[illegible]	[illegible]	[illegible]	[illegible]	[illegible]	[illegible]

QD BOARD WAVEFORM

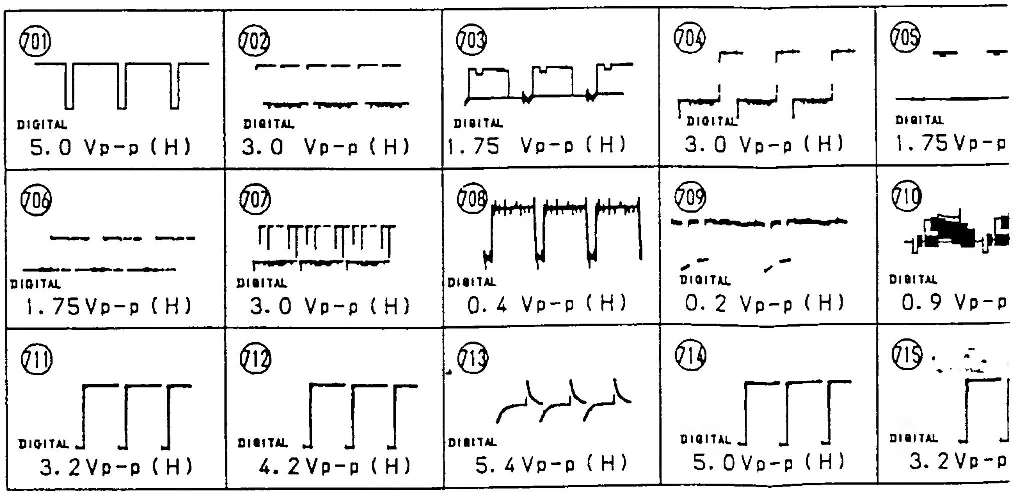

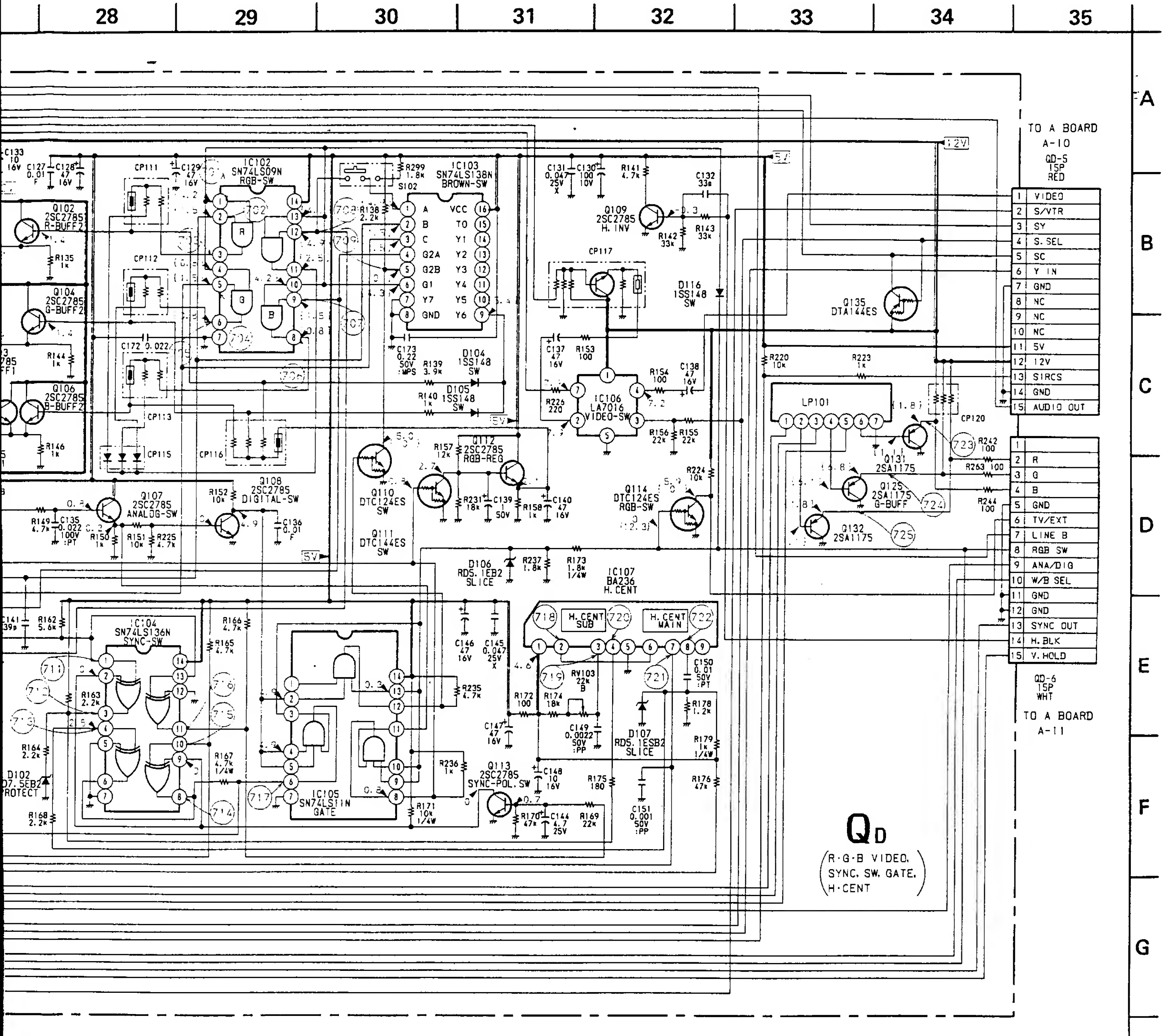
28
29
30
31
32
33
34
35
A
B
C
D
E
F
G
IC102
SN74LS09N
RGB-SW
IC103
SN74LS138N
BROWN-SW
IC104
SN74LS136N
SYNC-SW
IC105
SN74LS11N
GATE
IC106
LA7016
VIDEO-SW
IC107
BA236
H. CENT
H. CENT SUB
H. CENT MAIN
Q102
2SC2785
R-BUFF2
Q104
2SC2785
G-BUFF2
Q106
2SC2785
B-BUFF2
Q107
2SC2785
ANALOG-SW
Q108
2SC2785
DIGITAL-SW
Q109
2SC2785
H. INV
Q110
DTC124ES
SW
Q111
DTC144ES
SW
Q112
2SC2785
RGB-REG
Q113
2SC2785
SYNC-POL. SW
Q114
DTC124ES
RGB-SW
Q125
2SA1175
G-BUFF
Q131
2SA1175
Q132
2SA1175
Q135
DTA144ES
D104
1SS148
SW
D105
1SS148
SW
D106
RDS. 1EB2
SLICE
D107
RDS. 1EB2
SLICE
D116
1SS148
SW
D102
PROTECT
S102
LP101
RV103
22k
B
A
B
C
G2A
G2B
G1
Y7
GND
VCC
Y0
Y1
Y2
Y3
Y4
Y5
Y6
12V
5V
TO A BOARD
A-10
QD-5
15P
RED
1 VIDEO
2 S/VTR
3 SY
4 S. SEL
5 SC
6 Y IN
7 GND
8 NC
9 NC
10 NC
11 5V
12 12V
13 SIRCS
14 GND
15 AUDIO OUT
1
2 R
3 G
4 B
5 GND
6 TV/EXT
7 LINE B
8 RGB SW
9 ANA/DIG
10 W/B SEL
11 GND
12 GND
13 SYNC OUT
14 H. BLK
15 V. HOLD
QD-6
15P
WHT
TO A BOARD
A-11
QD
(R·G·B VIDEO, SYNC. SW, GATE, H·CENT)

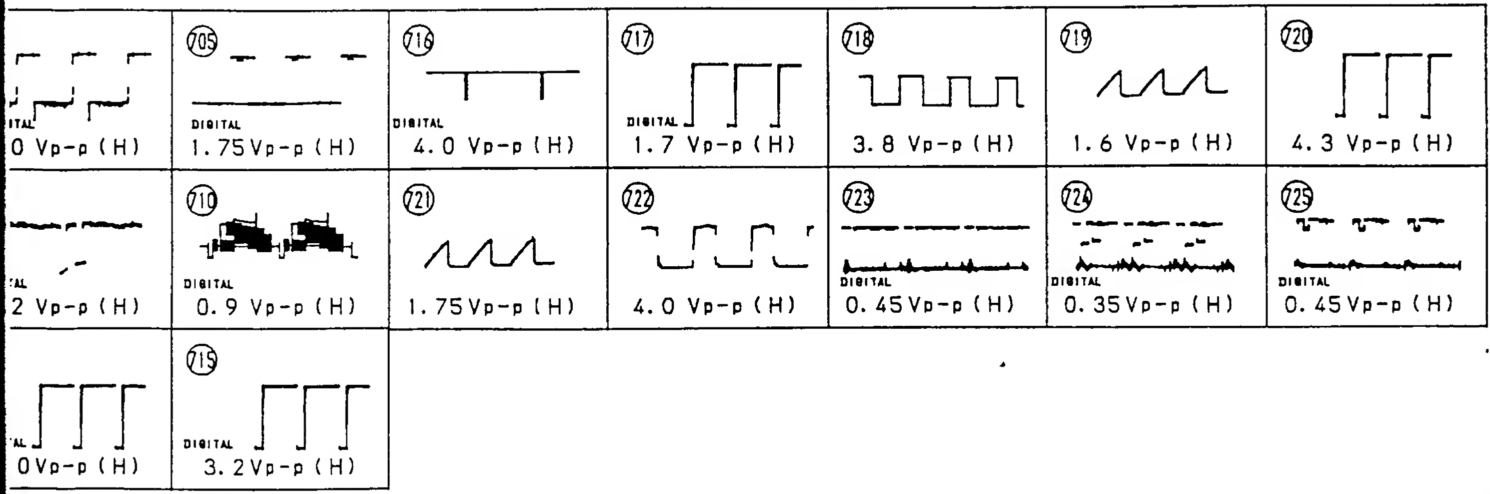
H
I
J
0 Vp-p (H)
705
DIGITAL
1.75 Vp-p (H)
716
DIGITAL
4.0 Vp-p (H)
717
DIGITAL
1.7 Vp-p (H)
718
3.8 Vp-p (H)
719
1.6 Vp-p (H)
720
4.3 Vp-p (H)
2 Vp-p (H)
710
DIGITAL
0.9 Vp-p (H)
721
1.75 Vp-p (H)
722
4.0 Vp-p (H)
723
DIGITAL
0.45 Vp-p (H)
724
DIGITAL
0.35 Vp-p (H)
725
DIGITAL
0.45 Vp-p (H)
0 Vp-p (H)
715
DIGITAL
3.2 Vp-p (H)

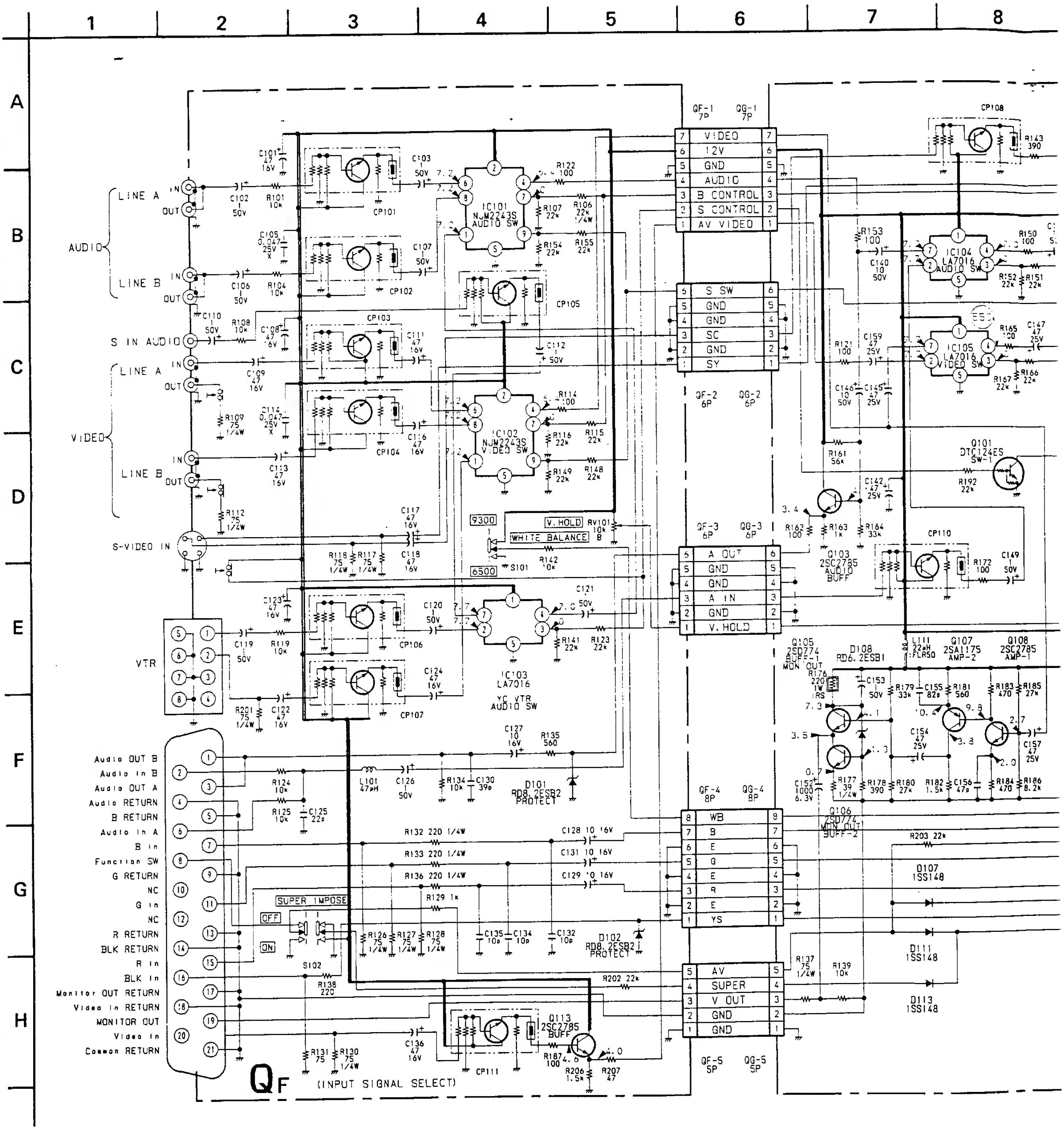
1
2
3
4
5
6
7
8
A
B
C
D
E
F
G
H
AUDIO
LINE A
IN
OUT
LINE B
S IN AUDIO
VIDEO
S-VIDEO IN
VTR
QF-1 7P
QG-1 7P
VIDEO
12V
GND
AUDIO
B CONTROL
S CONTROL
AV VIDEO
IC101 NJM2243S AUDIO SW
IC102 NJM2243S VIDEO SW
IC103 LA7016 YC VTR AUDIO SW
IC104 LA7016 AUDIO SW
IC105 LA7016 VIDEO SW
CP101
CP102
CP103
CP104
CP105
CP106
CP107
CP108
CP110
CP111
QF-2 6P
QG-2 6P
S SW
GND
SC
SY
9300
6500
V. HOLD
WHITE BALANCE
RV101 10k B
S101
QF-3 6P
QG-3 6P
A OUT
A IN
V. HOLD
Q101 DTC124ES SW-1
Q103 2SC2785 AUDIO BUFF
Q105 2SD774 BUFF-1 MON OUT
D108 RD6. 2ESB1
L111 22µH
Q107 2SA1175 AMP-2
Q108 2SC2785 AMP-1
Q106 2SD774 MON OUT BUFF-2
D107 1SS148
D111 1SS148
D113 1SS148
D101 RD8. 2ESB2 PROTECT
D102 RD8. 2ESB2 PROTECT
L101 47µH
Audio OUT B
Audio In B
Audio OUT A
Audio RETURN
B RETURN
Audio In A
B In
Function SW
G RETURN
NC
G In
R RETURN
BLK RETURN
R In
BLK In
Monitor OUT RETURN
Video In RETURN
MONITOR OUT
Video In
Common RETURN
SUPER IMPOSE
OFF
ON
S102
QF-4 8P
QG-4 8P
WB
B
E
G
R
YS
QF-5 5P
QG-5 5P
AV
SUPER
V OUT
Q113 2SC2785 BUFF
QF
(INPUT SIGNAL SELECT)

QG BOARD WAVEFORM

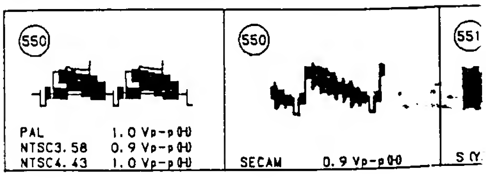

For Service Manuals
MAURITRON SERVICES
8 Cherry Tree Road, Chinnor
Oxfordshire, OX9 4QY.
Tel (01844) 351694
Fax (01844) 352554
email:- mauritron@dial.pipex.com

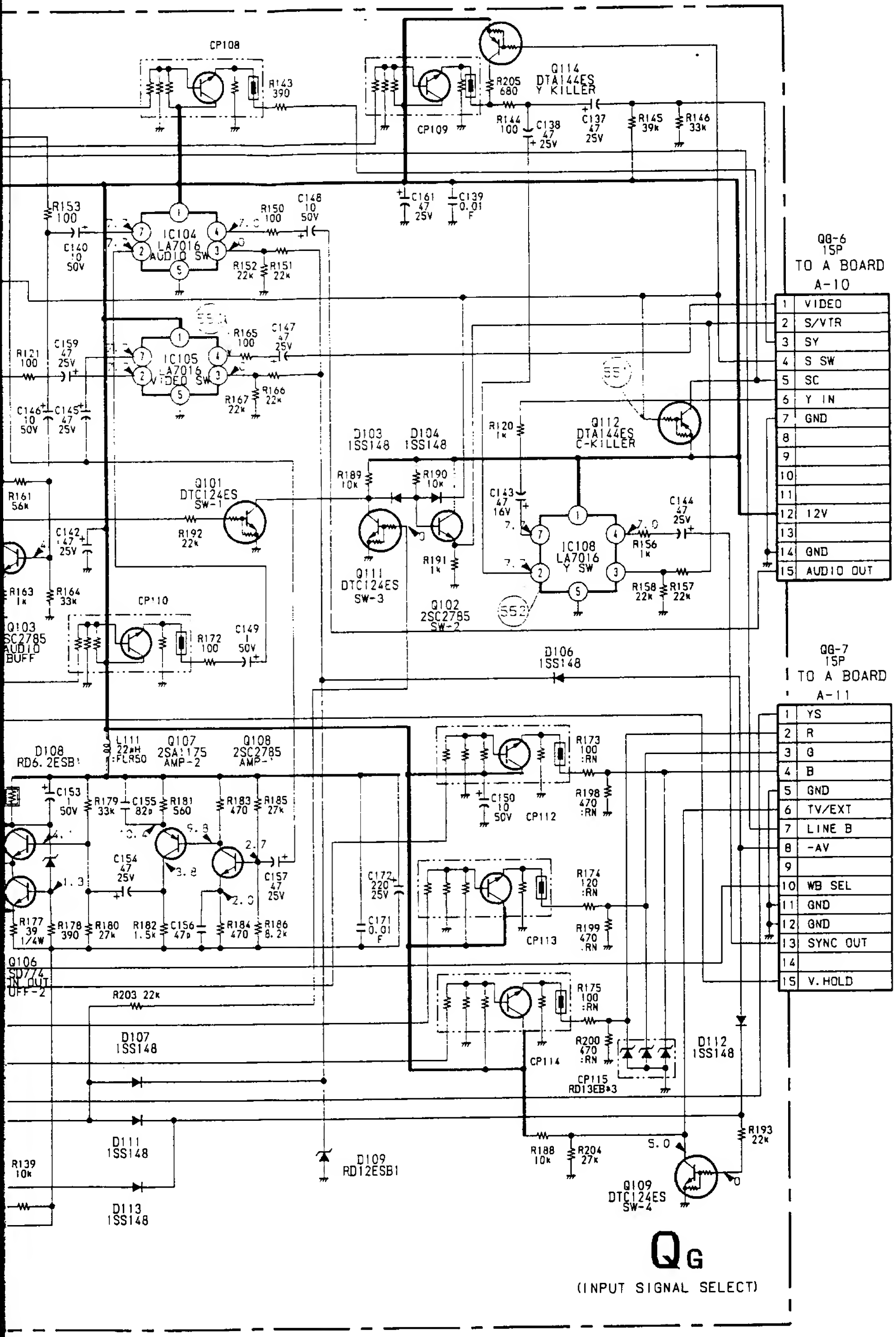
CP108
R143 390
Q114 DTA144ES Y KILLER
R205 680
CP109
R144 100
C138 47 25V
C137 47 25V
R145 39k
R146 33k
C161 47 25V
C139 0.01 F
R153 100
C140 10 50V
IC104 LA7016 AUDIO SW
R150 100
C148 10 50V
R152 22k
R151 22k
QG-6 15P TO A BOARD A-10
1 VIDEO
2 S/VTR
3 SY
4 S SW
5 SC
6 Y IN
7 GND
8
9
10
11
12 12V
13
14 GND
15 AUDIO OUT
R121 100
C159 47 25V
IC105 LA7016 VIDEO SW
R165 100
C147 47 25V
R167 22k
R166 22k
C146 10 50V
C145 47 25V
D103 1SS148
D104 1SS148
R120 1k
Q112 DTA144ES C-KILLER
R161 56k
Q101 DTC124ES SW-1
R192 22k
R189 10k
R190 10k
C143 47 16V
C144 47 25V
IC108 LA7016 Y SW
R156 1k
C142 47 25V
R191 1k
Q111 DTC124ES SW-3
Q102 2SC2785 SW-2
R158 22k
R157 22k
R163 1k
R164 33k
CP110
R172 100
C149 1 50V
Q103 2SC2785 AUDIO BUFF
D106 1SS148
QG-7 15P TO A BOARD A-11
1 YS
2 R
3 G
4 B
5 GND
6 TV/EXT
7 LINE B
8 -AV
9
10 WB SEL
11 GND
12 GND
13 SYNC OUT
14
15 V.HOLD
D108 RD6.2ESB
L111 22μH FLR50
Q107 2SA1175 AMP-2
Q108 2SC2785 AMP-1
R173 100 RN
C150 10 50V
CP112
R198 470 RN
C153 1 50V
R179 33k
C155 82p
R181 560
R183 470
R185 27k
C154 47 25V
C157 47 25V
C172 220 25V
C171 0.01 F
R174 120 RN
R199 470 RN
CP113
R177 39 1/4W
R178 390
R180 27k
R182 1.5k
C156 47p
R184 470
R186 8.2k
Q106 2SD774 IN OUT BUFF-2
R203 22k
R175 100 RN
R200 470 RN
CP114
CP115 RD13EB×3
D112 1SS148
D107 1SS148
D111 1SS148
R193 22k
R188 10k
R204 27k
Q109 DTC124ES SW-4
R139 10k
D109 RD12ESB1
D113 1SS148
550
551
552
QG
(INPUT SIGNAL SELECT)

– QA Board – (PVM-1444QM)

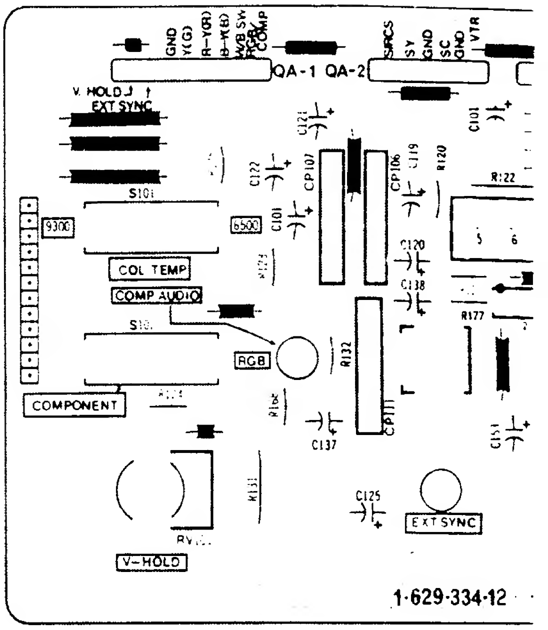
GND
Y(G)
R-Y(R)
B-Y(B)
WB SW
RGB/COMP
QA-1
QA-2
SIRCS
SY
GND
SC
GND
VTR
V. HOLD
EXT SYNC
S101
9300
6500
COL TEMP
COMP AUDIO
S103
RGB
COMPONENT
CP107
CP106
CP111
R132
R131
R122
R177
C101
C121
C122
C120
C138
C137
C125
C151
RV
V-HOLD
EXT SYNC
1-629-334-12

– QB Board – (PVM-1444QM)

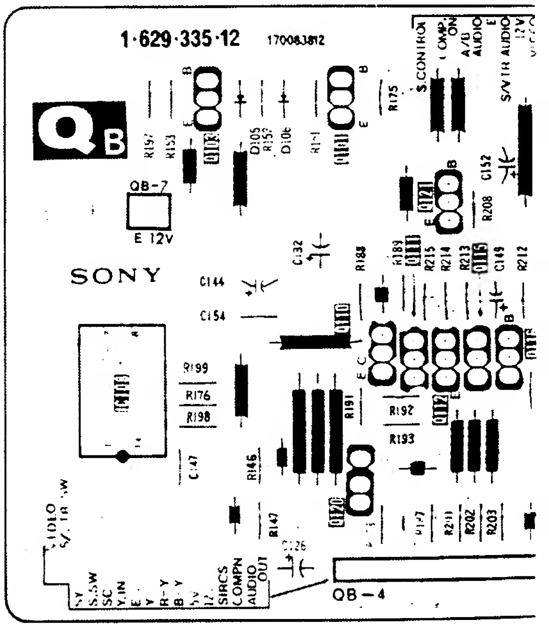
1-629-335-12
170083812
QB
S.CONTROL
COMP ON
A/U AUDIO
12V
S/VTR AUDIO
QB-7
E 12V
SONY
C144
C154
C132
C152
R175
R208
R188
R189
R215
R214
R213
R212
C149
R199
R176
R198
R191
R192
R193
R146
R147
C147
C126
R211
R202
R203
QB-4
SY
S.SW
SC
Y.IN
E
V
R-Y
B-Y
SV
12
SIRCS
COMPN
AUDIO OUT

WAVEFORM

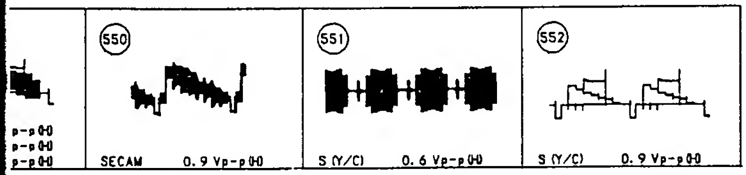

QA [INPUT SIGNAL SELECT]

QB [INPUT SIGNAL SELECT, SYSTEM SW]

QD [R·G·B, VIDEO, SYNC SW GATE, H·POSITION]

QE [AUDIO SW]

Q

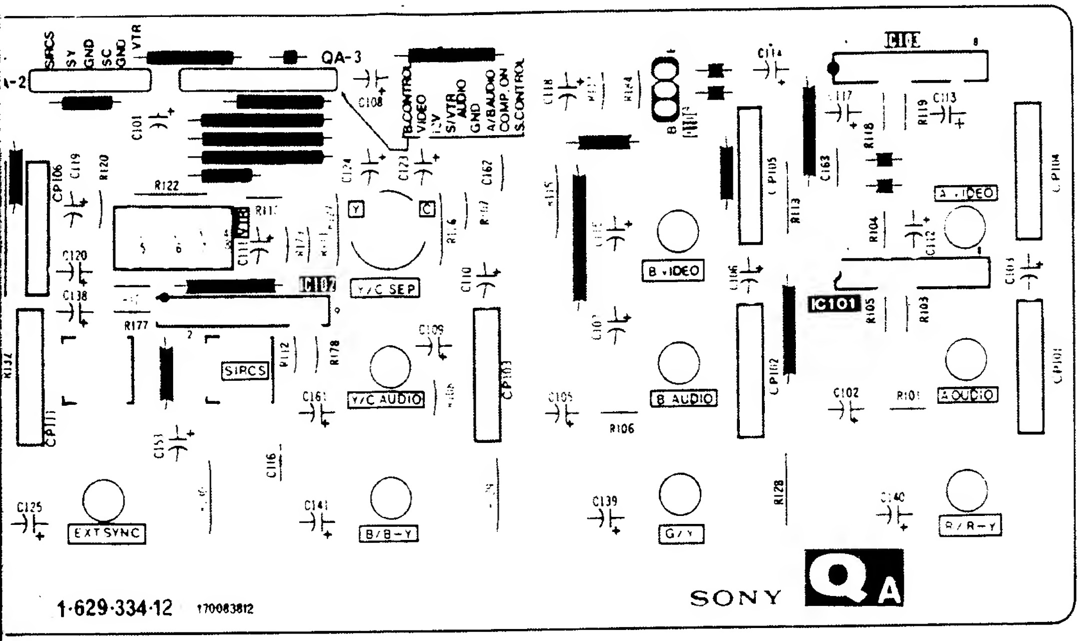
QA-3
SIRCS
SY
GND
SC
GND
VTR
B.CONTROL
VIDEO
12V
S/VTR AUDIO
GND
A/B AUDIO
COMP. ON
S.CONTROL
IC102
IC103
IC101
Y/C SEP
SIRCS
Y/C AUDIO
B VIDEO
B AUDIO
A VIDEO
A AUDIO
EXT SYNC
B/B-Y
G/Y
R/R-Y
1-629-334-12
170083812
SONY
QA

– QC Board – (PVM-1442QM)

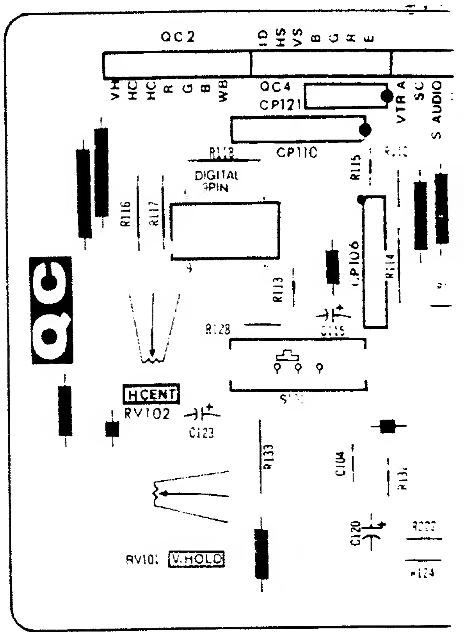
QC2
QC4
CP121
CP110
DIGITAL 4PIN
CP106
QC
H CENT
RV102
RV101
V.HOLD

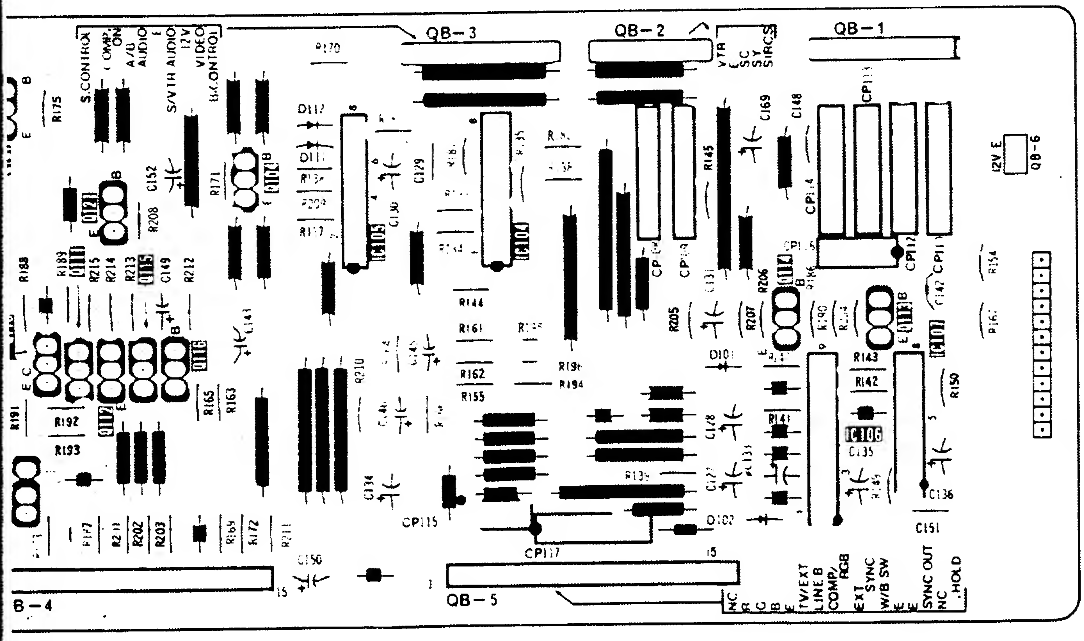
QB-3
QB-2
QB-1
S.CONTROL
COMP. ON
A/B AUDIO
S/VTR AUDIO
12V
VIDEO
B.CONTROL
VTR
SC
SY
SIRCS
IC105
IC104
IC106
IC107
12V E
QB-6
CP115
CP117
QB-5
B-4
NC
TV/EXT
LINE B
COMP/RGB
EXT SYNC
W/B SW
SYNC OUT
NC
H.HOLD

– QE Board – (PVM-1442QM)

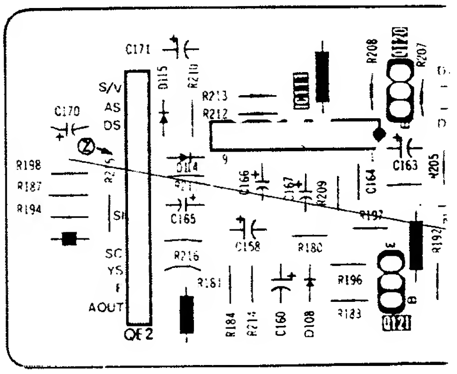
S/V
AS
DS
SC
YS
AOUT
QE2
IC111

– QD Board – (PVM-1442QM)

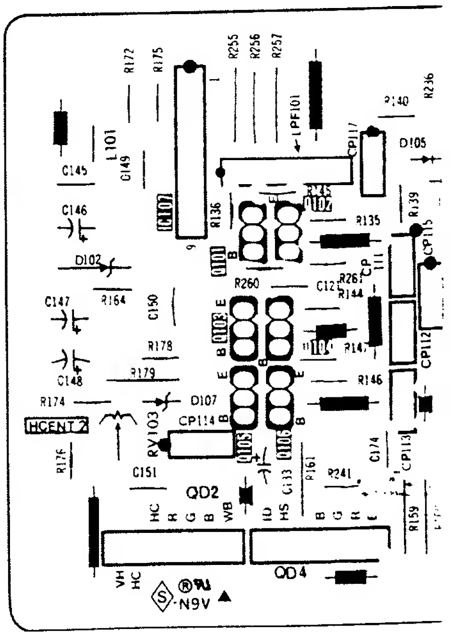
L101
LPF101
IC102
IC101
HCENT 2
RV103
CP114
QD2
QD4
CP111
CP112
CP113
CP115
N9V

C SW]

QE [AUDIO SW]

QC [INPUT SIGNAL SELECT]

QF [INPUT SIGNAL SELECT]

QG [INPUT SIGNAL SELEC

– QC Board – (PVM-1442QM)

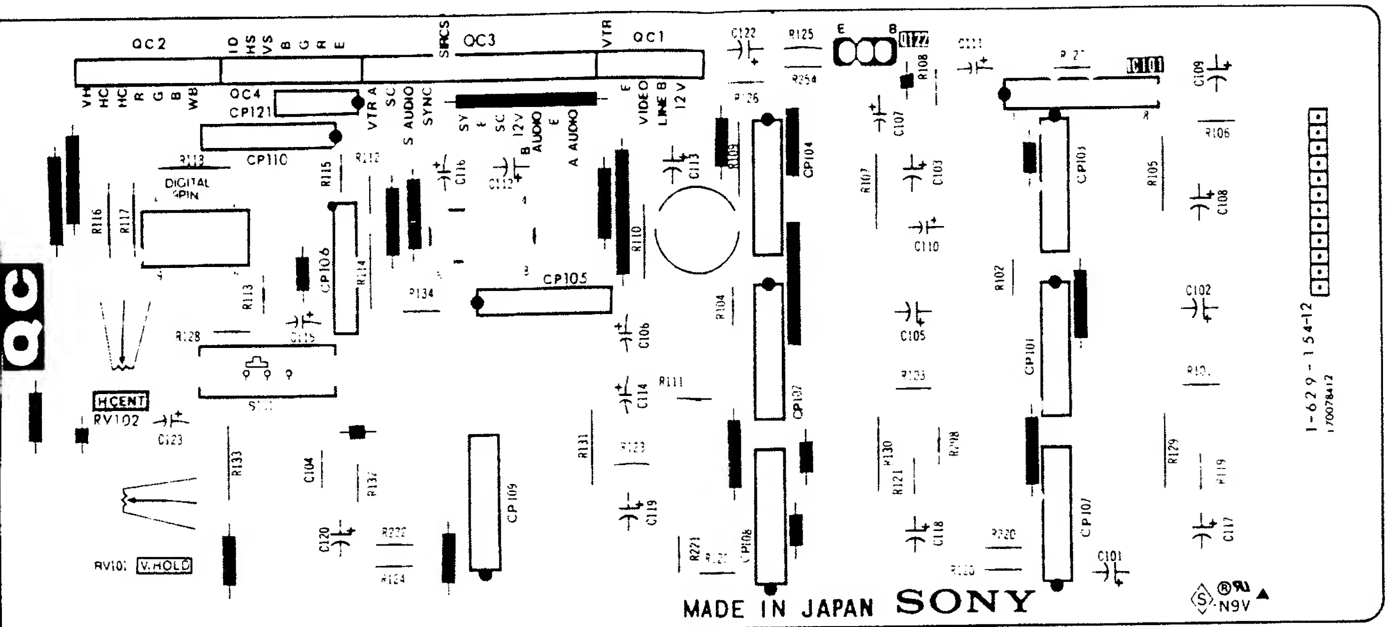
QC2
QC3
QC1
QC4
CP121
CP110
DIGITAL PIN
CP105
CP104
CP103
CP102
CP101
CP106
CP107
CP108
CP109
IC101
Q122
HCENT
RV102
RV101 V.HOLD
VH
HC
R
G
B
WB
VTR A
SC
S AUDIO
SYNC
VIDEO
LINE B
12V
A AUDIO
1-629-154-12
MADE IN JAPAN
SONY
N9V

– QF Boar

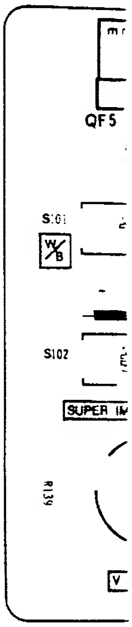
QF5
S101
W/B
S102
SUPER IM
R139

QE Board – (PVM-1442QM)

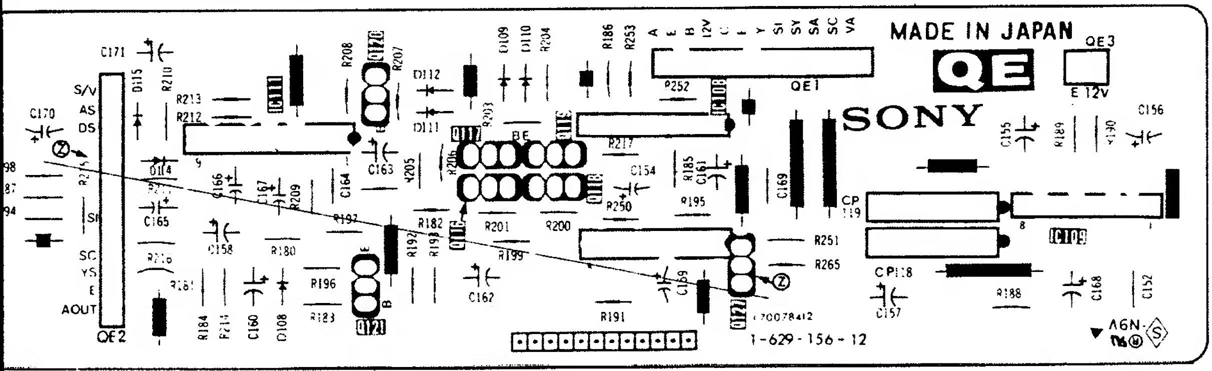
MADE IN JAPAN
QE3
QE1
E 12V
QE
SONY
S/V
AS
DS
SC
YS
E
AOUT
QE2
IC111
IC108
IC109
Q120
Q121
Q117
Q118
Q119
Q116
Q113
CP118
CP119
1-629-156-12
A6N

– QG Boar

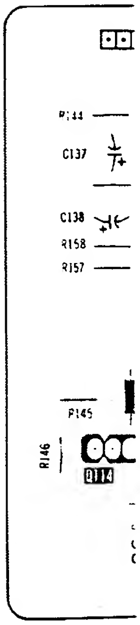
R144
C137
C138
R158
R157
R145
R146
Q114

QD Board – (PVM-1442QM)

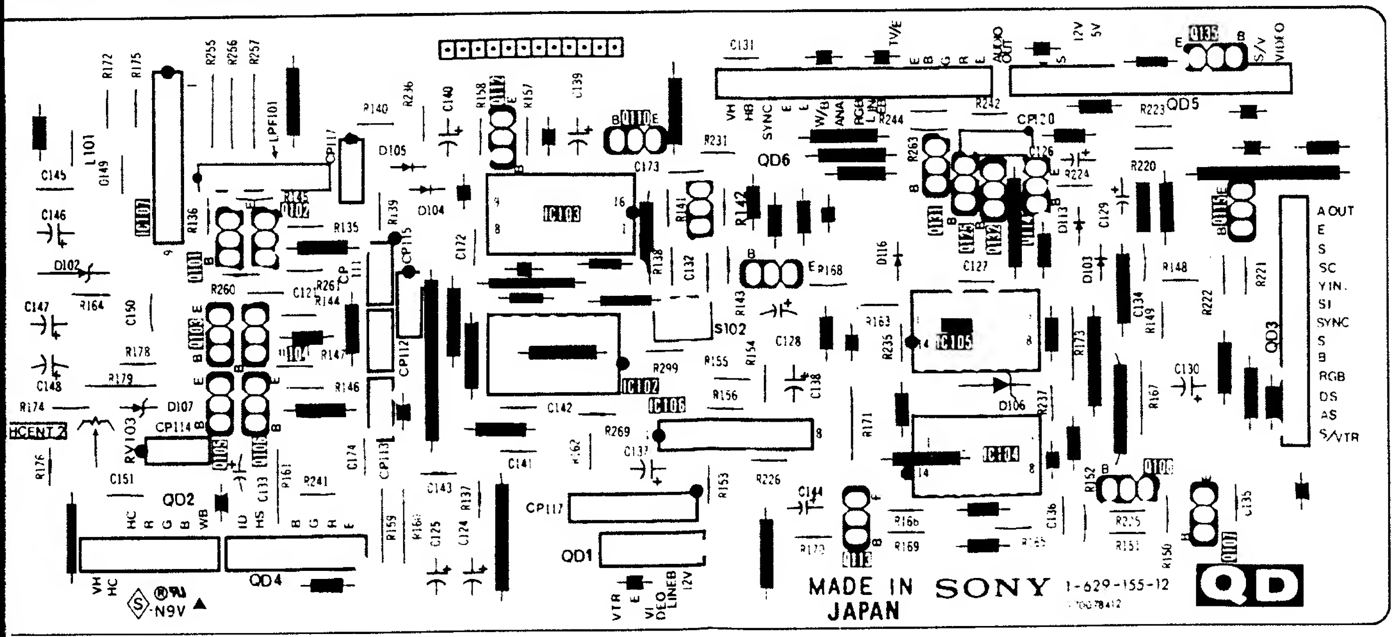
L101
LPF101
IC107
IC103
IC102
IC106
IC105
IC104
Q110
Q113
Q115
QD5
QD6
QD2
QD4
QD1
QD3
CP120
CP111
CP112
CP113
CP114
CP115
CP117
S102
RV103
HCENT 2
AOUT
E
S
SC
YIN
SI
SYNC
S
B
RGB
DS
AS
S/VTR
VTR
E
VIDEO
LINEB
12V
MADE IN JAPAN
SONY
1-629-155-12
QD
N9V

INPUT SIGNAL SELECT]

— QF Board — (PVM-1440QM)

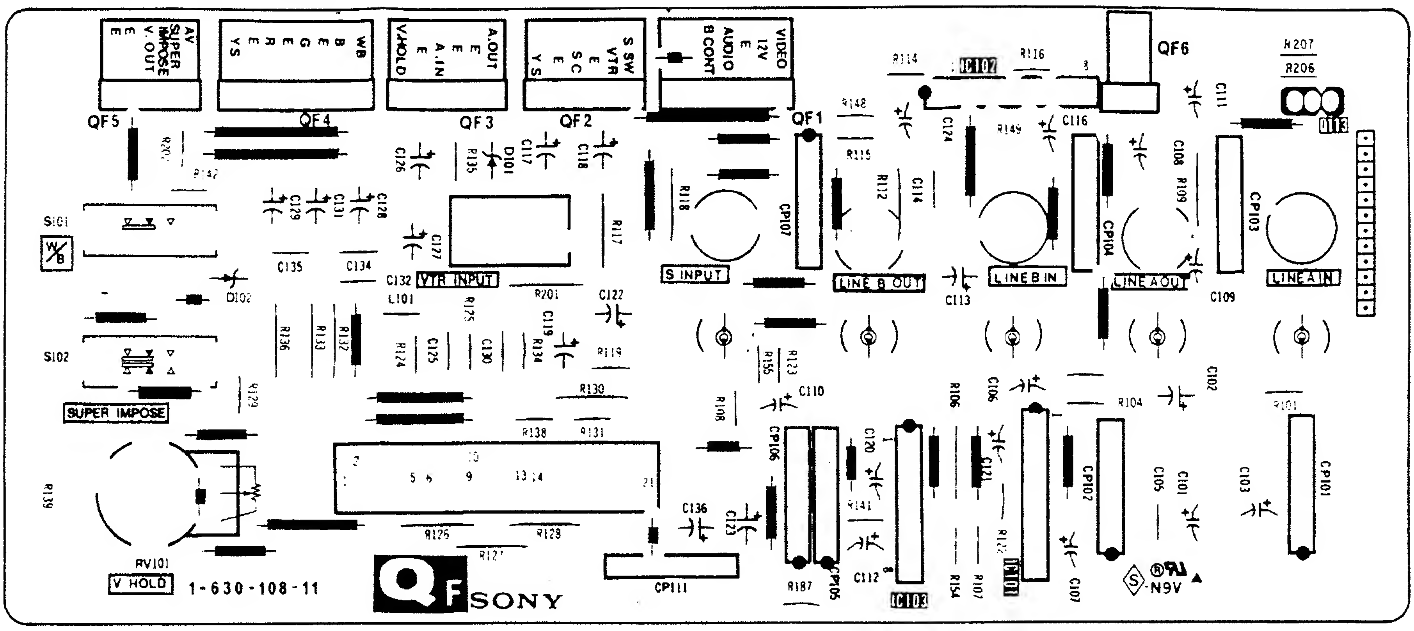
QF5
AV
SUPER IMPOSE
V. OUT
E
E
QF4
WB
B
E
G
E
R
E
YS
QF3
V.HOLD
A.OUT
E
A.IN
E
QF2
S SW
VTR
E
SC
E
YS
QF1
VIDEO
12V
E
AUDIO
B CONT
QF6
IC102
IC101
IC103
Q113
S101
W/B
S102
SUPER IMPOSE
RV101
V HOLD
VTR INPUT
S INPUT
LINE B OUT
LINE B IN
LINE A OUT
LINE A IN
CP101
CP102
CP103
CP104
CP105
CP106
CP107
CP111
1-630-108-11
QF
SONY
N9V

— QG Board — (PVM-1440QM)

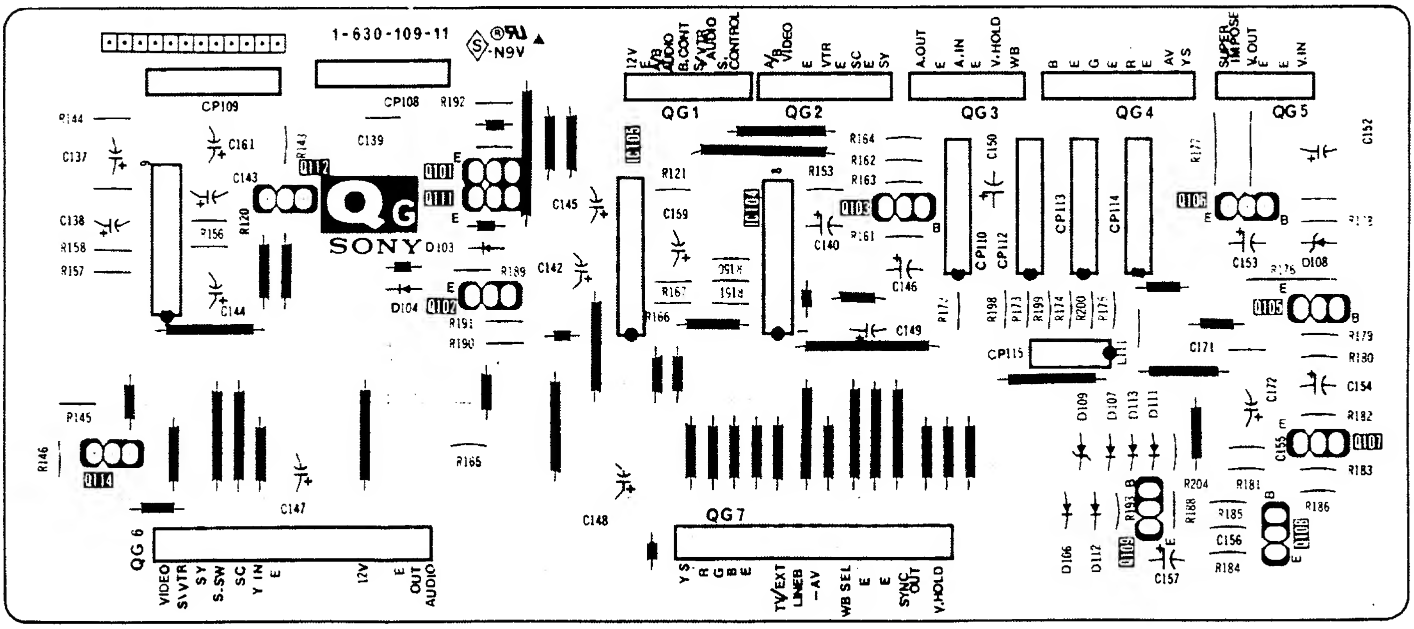
1-630-109-11
N9V
CP109
CP108
QG1
12V
E
A/B
AUDIO
B.CONT
S/VTR
AUDIO
S.CONTROL
QG2
A/B
VIDEO
E
VTR
E
SC
E
SY
QG3
A.OUT
E
A.IN
E
V.HOLD
WB
QG4
B
E
G
E
R
E
AV
YS
QG5
SUPER IMPOSE
V.OUT
E
E
V.IN
IC104
IC105
Q101
Q102
Q103
Q104
Q105
Q106
Q107
Q108
Q109
Q111
Q112
Q114
CP110
CP112
CP113
CP114
CP115
QG
SONY
QG 6
VIDEO
S/VTR
SY
S.SW
SC
Y IN
E
12V
E
OUT AUDIO
QG7
YS
R
G
B
E
TV/EXT
LINE B
A/V
WB SEL
E
E
SYNC OUT
V.HOLD

A BOARD IC307

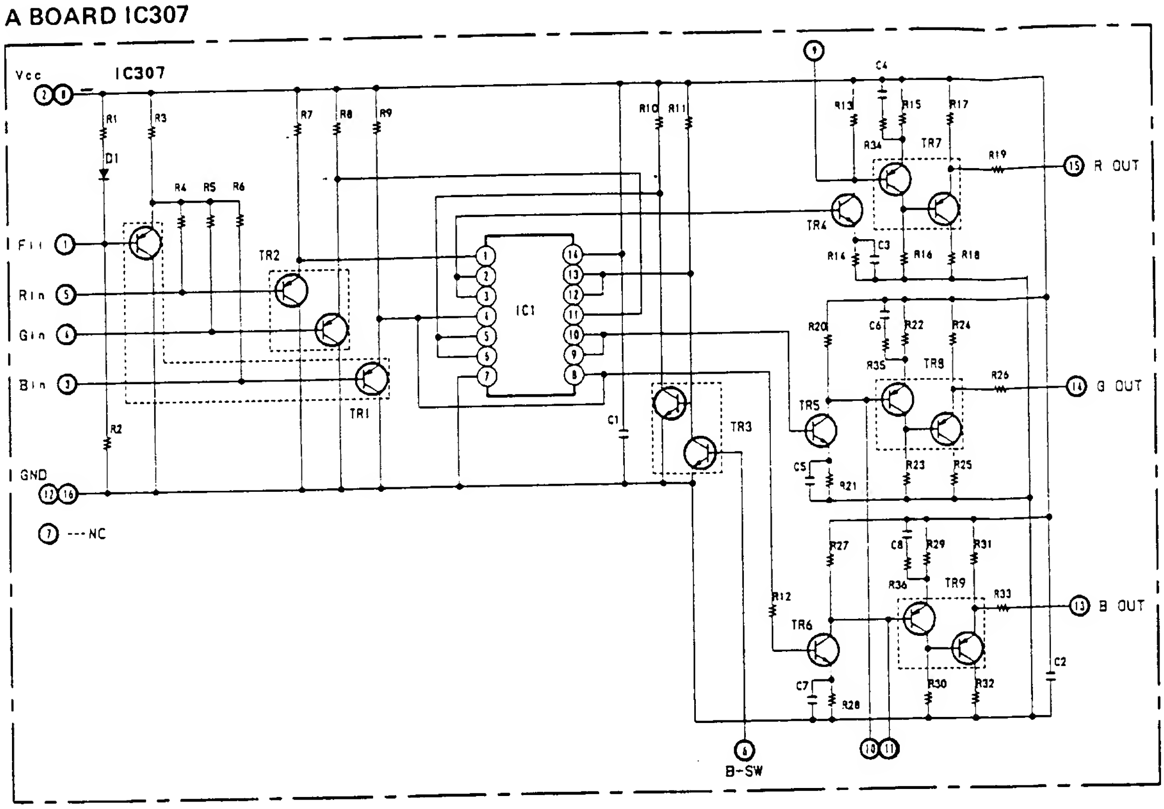
IC307
Vcc ② ⑧
F i i ①
R i n ⑤
G i n ④
B i n ③
GND ⑫ ⑯
⑦ ---NC
R1
R2
R3
D1
R4 R5 R6
R7 R8 R9
R10 R11
TR1
TR2
TR3
IC1
C1
⑨
C4
R13 R15 R17
R34
TR7
R19
⑮ R OUT
TR4
R14 C3 R16 R18
R20 C6 R22 R24
R35 TR8
R26
⑭ G OUT
TR5
C5 R21
R23 R25
R27 C8 R29 R31
R36 TR9
R33
⑬ B OUT
R12
TR6
C7 R28
R30 R32
C2
⑥ B-SW
⑩ ⑪

A BOARD IC503

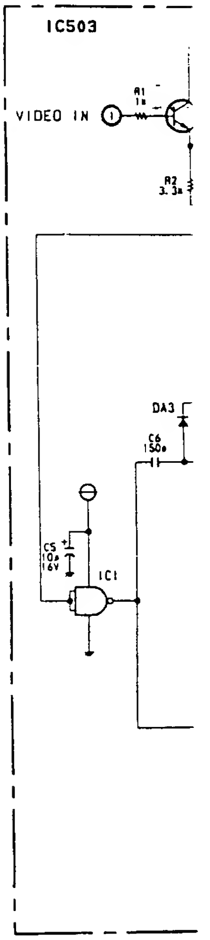
IC503
VIDEO IN ①
R1 1k
R2 3.3k
DA3
C6 150p
C5 10μ 16V
IC1

A BOARD IC 305

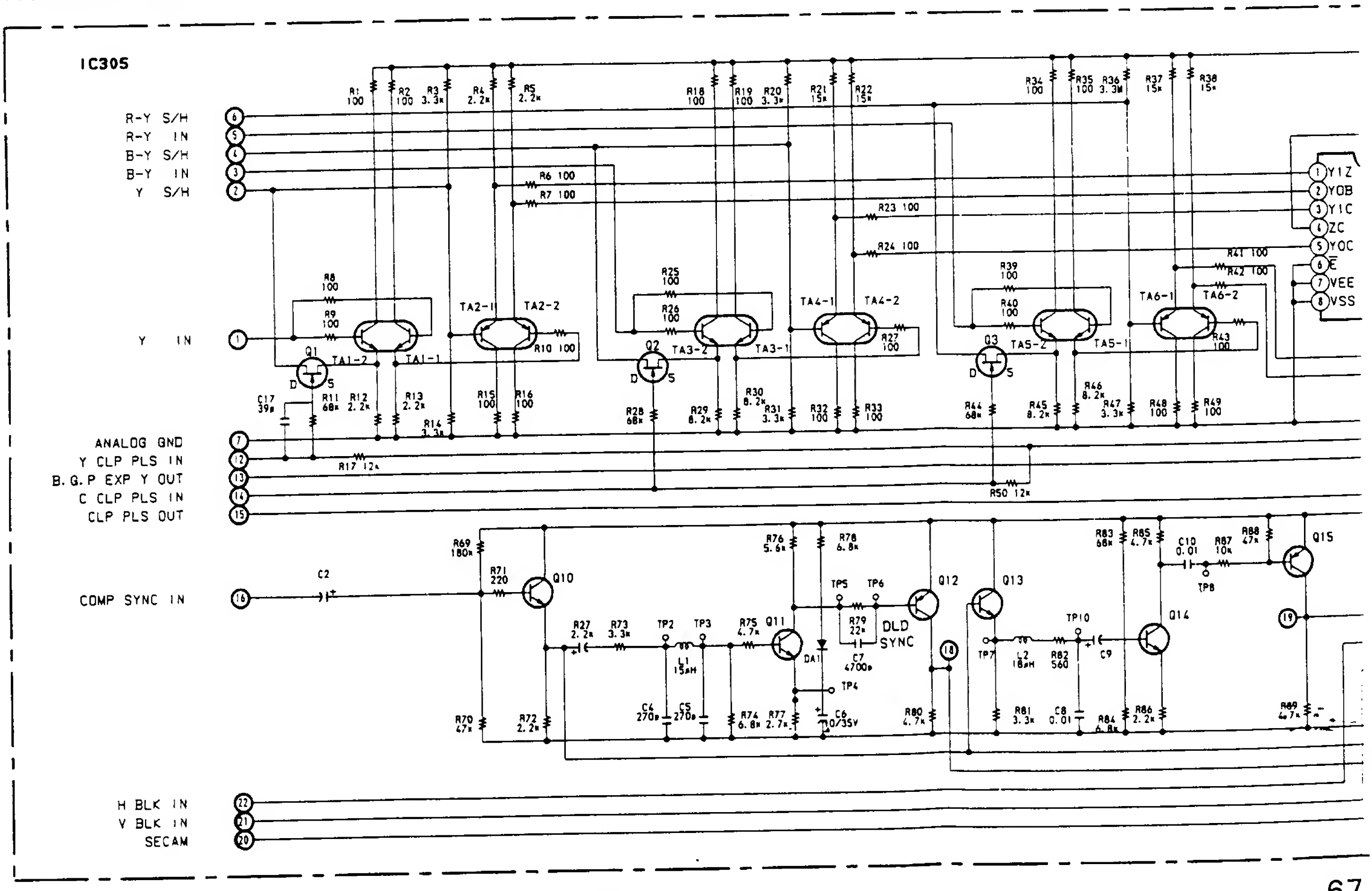
IC305
R-Y S/H ⑥
R-Y IN ⑤
B-Y S/H ④
B-Y IN ③
Y S/H ②
Y IN ①
ANALOG GND ⑦
Y CLP PLS IN ⑫
B.G.P EXP Y OUT ⑬
C CLP PLS IN ⑭
CLP PLS OUT ⑮
COMP SYNC IN ⑯
H BLK IN ㉒
V BLK IN ㉑
SECAM ⑳
R1 100
R2 100
R3 3.3k
R4 2.2k
R5 2.2k
R6 100
R7 100
R8 100
R9 100
R10 100
R11 68k
R12 2.2k
R13 2.2k
R14 3.3k
R15 100
R16 100
R17 12k
R18 100
R19 100
R20 3.3k
R21 15k
R22 15k
R23 100
R24 100
R25 100
R26 100
R27 100
R28 68k
R29 8.2k
R30 8.2k
R31 3.3k
R32 100
R33 100
R34 100
R35 100
R36 3.3M
R37 15k
R38 15k
R39 100
R40 100
R41 100
R42 100
R43 100
R44 68k
R45 8.2k
R46 8.2k
R47 3.3k
R48 100
R49 100
R50 12k
C17 39p
Q1
Q2
Q3
D S
TA1-1 TA1-2
TA2-1 TA2-2
TA3-1 TA3-2
TA4-1 TA4-2
TA5-1 TA5-2
TA6-1 TA6-2
① Y1Z
② YOB
③ Y1C
④ ZC
⑤ YOC
⑥ E
⑦ VEE
⑧ VSS
C2
R69 180k
R70 47k
R71 220
R72 2.2k
Q10
R27 2.2k
R73 3.3k
TP2 TP3
L1 15μH
C4 270p
C5 270p
R75 4.7k
Q11
R74 6.8k
R77 2.7k
DA1
C6 10/35V
TP4
R76 5.6k
R78 6.8k
TP5 TP6
R79 22k
C7 4700p
DLD SYNC
Q12
⑱
R80 4.7k
Q13
TP7
L2 18μH
R82 560
TP10
C9
R81 3.3k
C8 0.01
R84 6.8k
R83 68k
R85 4.7k
R86 2.2k
Q14
C10 0.01
R87 10k
TP8
R88 47k
Q15
⑲
R89 4.7k

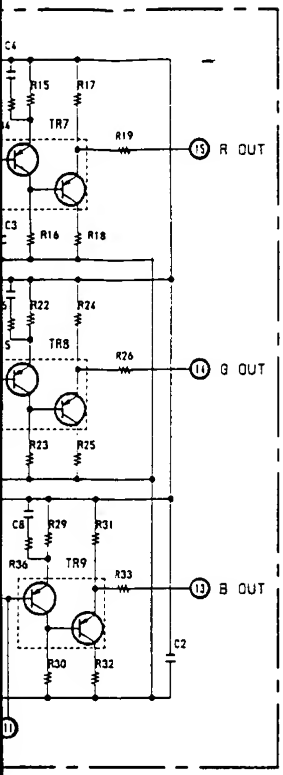
TR7
R19
⑮ R OUT
TR8
R26
⑭ G OUT
TR9
R33
⑬ B OUT
C2

A BOARD IC503

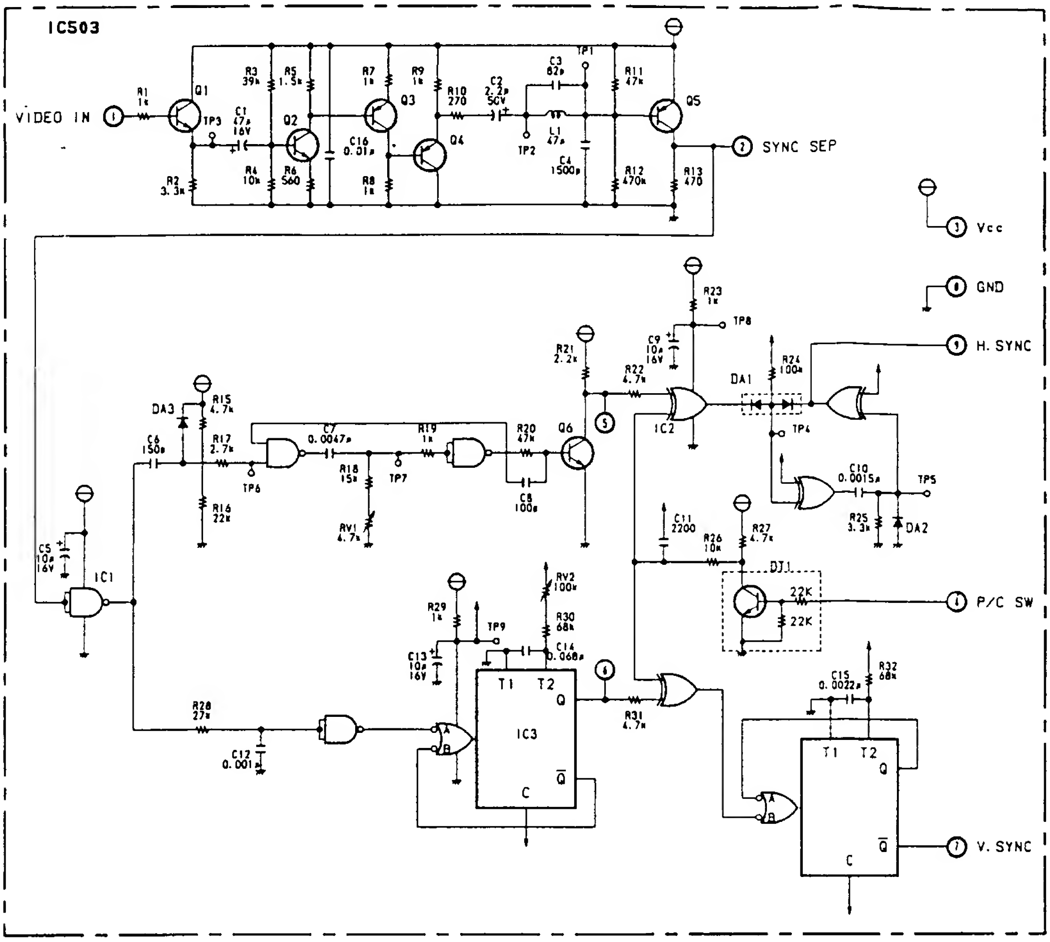
IC503
VIDEO IN ①
Q1
Q2
Q3
Q4
Q5
② SYNC SEP
③ Vcc
⑧ GND
⑨ H. SYNC
DA1
DA2
DA3
IC1
IC2
IC3
DJ1
22K
22K
④ P/C SW
T1
T2
Q
C
⑦ V. SYNC
TP1
TP2
TP3
TP4
TP5
TP6
TP7
TP8
TP9
RV1 4.7k
RV2 100k

A BOAR

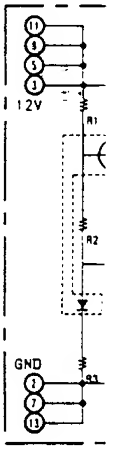

A BOAR

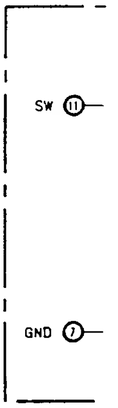

A BOAR

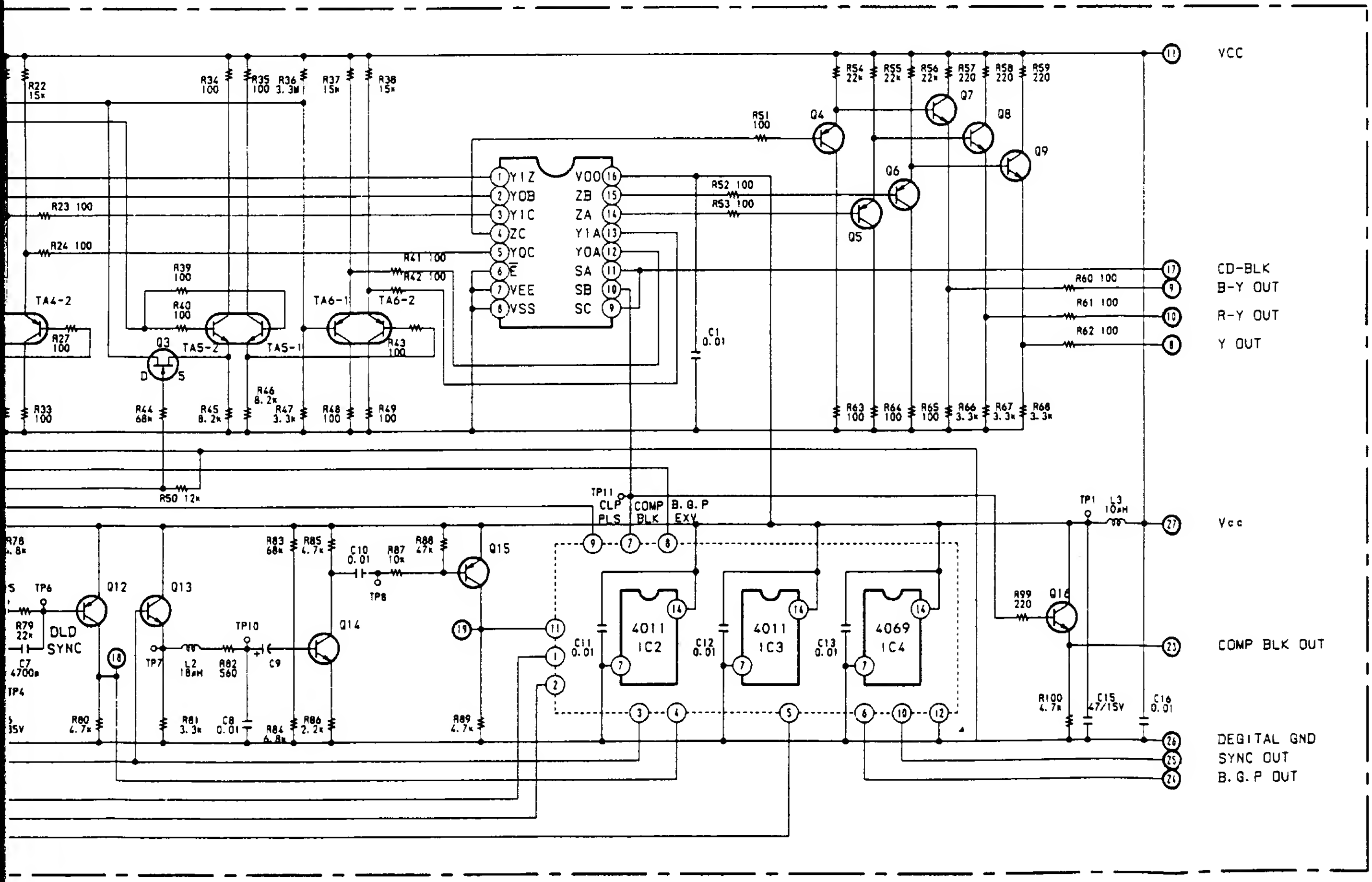
⑪ VCC
Y1Z
Y0B
Y1C
ZC
Y0C
E
VEE
VSS
VDD
ZB
ZA
Y1A
Y0A
SA
SB
SC
Q4
Q5
Q6
Q7
Q8
Q9
TA4-2
TA5-2
TA5-1
TA6-1
TA6-2
Q3
⑰ CD-BLK
⑨ B-Y OUT
⑩ R-Y OUT
⑧ Y OUT
CLP PLS
COMP BLK
B.G.P EXV
㉗ Vcc
Q12
Q13
Q14
Q15
Q16
DLD SYNC
4011 IC2
4011 IC3
4069 IC4
㉓ COMP BLK OUT
㉖ DEGITAL GND
㉕ SYNC OUT
㉔ B.G.P OUT

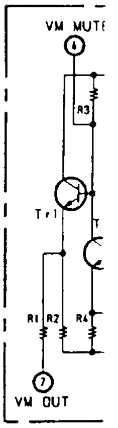
VM MUTE
Tr1
⑦ VM OUT

6-6. SEMI

A BOARD IC302

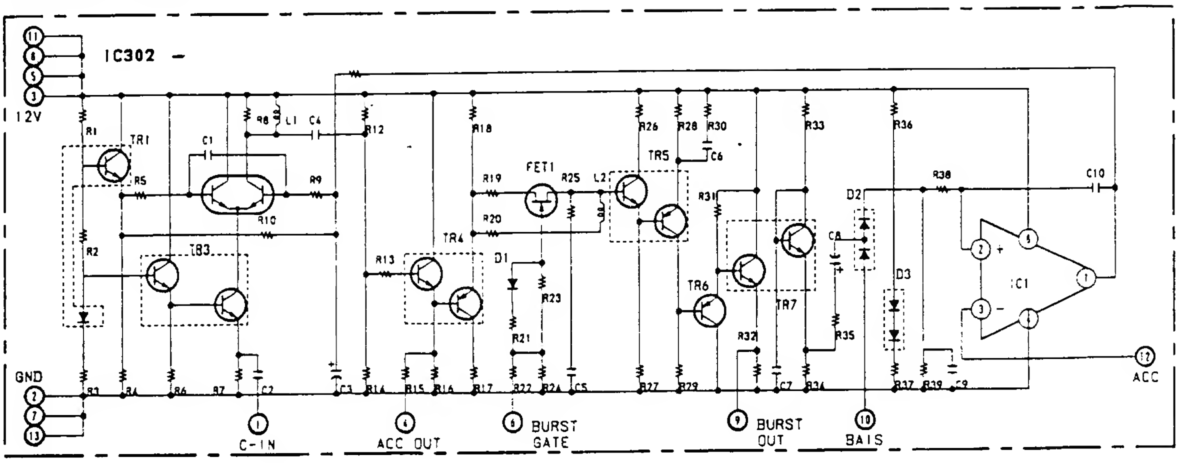
IC302
11
8
5
3
12V
GND
2
7
13
TR1
TR2
TR3
TR4
TR5
TR6
TR7
FET1
L1
L2
C1
C2
C3
C4
C5
C6
C7
C8
C9
C10
D1
D2
D3
IC1
1 C-IN
4 ACC OUT
6 BURST GATE
9 BURST OUT
10 BAIS
12 ACC

A BOARD IC308

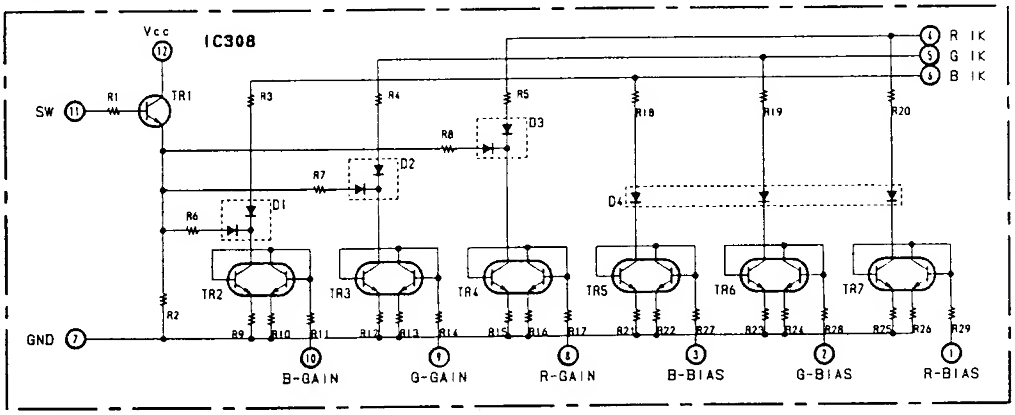
Vcc
12
IC308
SW 11
TR1
TR2
TR3
TR4
TR5
TR6
TR7
D1
D2
D3
D4
4 R IK
5 G IK
6 B IK
GND 7
10 B-GAIN
9 G-GAIN
8 R-GAIN
3 B-BIAS
2 G-BIAS
1 R-BIAS

A BOARD IC304

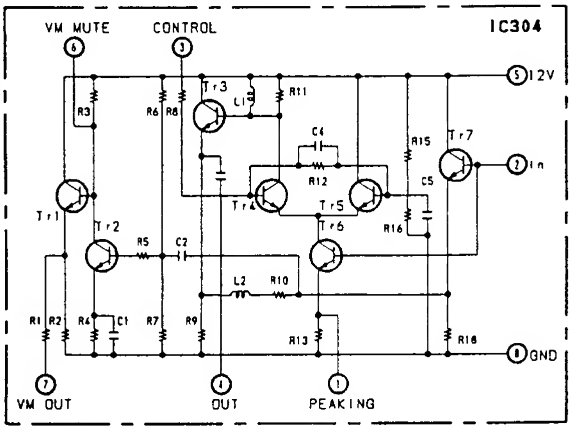
VM MUTE
6
CONTROL
3
IC304
5 12V
2 In
8 GND
Tr1
Tr2
Tr3
Tr4
Tr5
Tr6
Tr7
L1
L2
C1
C2
C4
C5
7 VM OUT
4 OUT
1 PEAKING

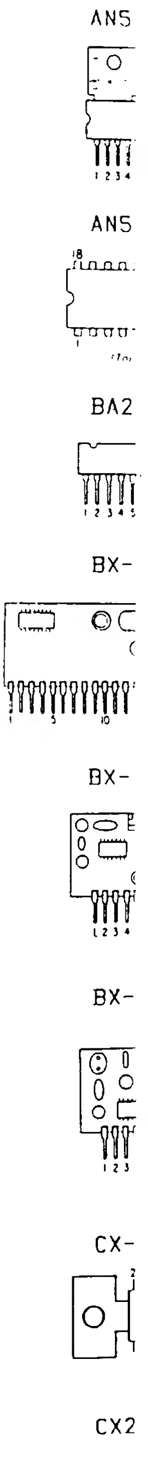
ANS
ANS
BA2
BX-
BX-
BX-
CX-
CX2

CX-
IR9
LA7
UPC
UPC

6-6. SEMICONDUCTORS

AN5265

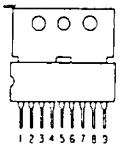

AN5613

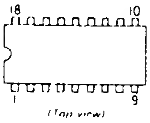
18
10
1
9
(Top view)

BA236

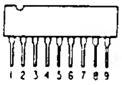

BX-7573

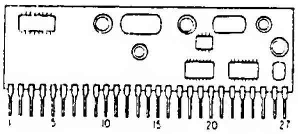
1
5
10
15
20
27

BX-7574

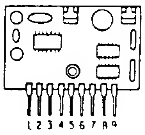

BX-7595

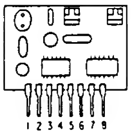

CX-175

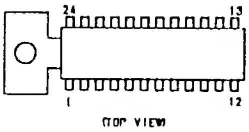
24
13
1
12
(TOP VIEW)

CX20125

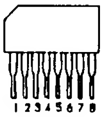

CX-23025
IR9431
LA7016
UPC358C
UPC4558C

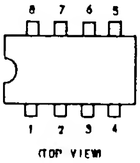
8 7 6 5
1 2 3 4
(TOP VIEW)

CXA1024S

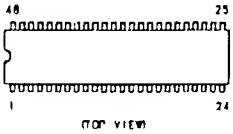
48
25
1
24
(TOP VIEW)

LA7061

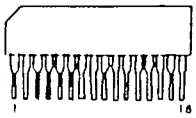

NJM2243S

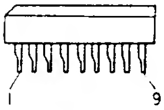

NJM7812B

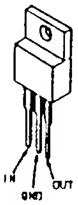

PC111S

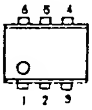

SN74LS09N
SN74LS11N
SN74LS136N
TC4011BP
TC4066BP
UPC1394C

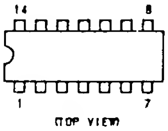
14
8
1
7
(TOP VIEW)

SN74LS138N
TC4052BP
TC4053BP
TC4538BP

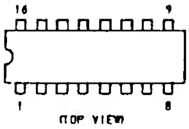
16
9
1
8
(TOP VIEW)

TA7193P

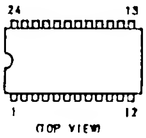
24
13
1
12
(TOP VIEW)

UPC1377C

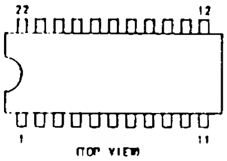
22
12
1
11
(TOP VIEW)

DTA124ES-TP
DTA144ES
DTC124ES-TP
DTC144ES-TP

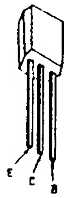

2SA1091-R
2SC1890A-ETZ

2SC2551-R

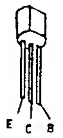

2SA1175TP-F
2SA1175TP-HFE
2SC2785TP-F
2SC2785TP-HFE

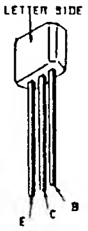
LETTER SIDE
E
C
B

2SA1220A-P
2SA1220A-Q
2SC2611
2SC2688-K
2SC2690A-Q

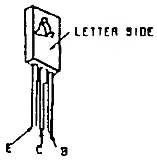
LETTER SIDE
E
C
B

2SC2958-L
2SD773-T-4
2SD774-T-3

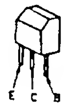

2SD1134-C

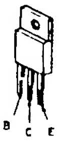

2SD1397-CA

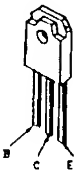

2SK105A-40

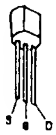

DAN209S-TP

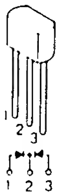

ERB11-06
ERD28-08S
RD6.8EB2
RGP10D
RGP15D
1SS83

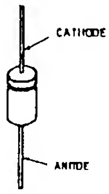
CATHODE
ANODE

ERC26-15
V11N

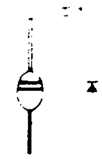

GP08D

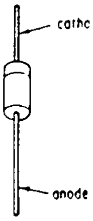
catho
anode

RD4.3ES

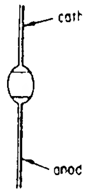

RD5.6EB

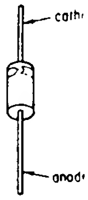

RD5.1ES-
RD5.6ES-
RD6.2ES-
RD6.8ES-
RD8.2ES-
RD10ES-T
RD10ES-T
RD13ES-T
RD15ES-T
RD16ES-T
RD39ES-T

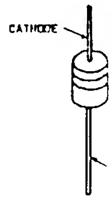

RD-6.8EB-
RD16EB3T
RD24EB27
10E2-TA2E

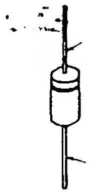

ERC26-15S
V11N

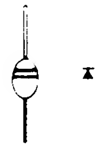

GP08D

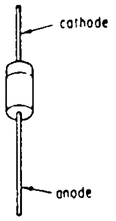
cathode
anode

RD4.3ES-T1L2

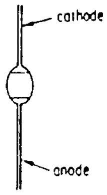
cathode
anode

RD5.6EBZ75TN

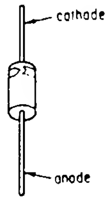
cathode
anode

RD5.1ES-2V
RD5.6ES-T1L1
RD6.2ES-T1B2
RD6.8ES-T1B2
RD8.2ES-T1B2
RD10ES-T1B1
RD10ES-T1L3
RD13ES-T1B3
RD15ES-T1B2
RD16ES-T1B3
RD39ES-T1B4

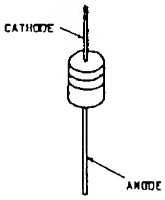
CATHODE
ANODE

RD-6.8EB-2
RD16EB3TN
RD24EB27TN
10E2-TA2B

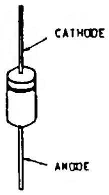
CATHODE
ANODE

RD110EBTN
RH-1Z
RU2AM
S1B01-06
S1B01-04TP1

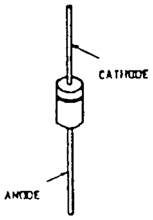
CATHODE
ANODE

S3WB60Z

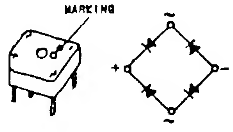

V19E

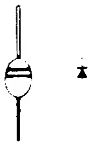

1SS148
1SS148-TP7

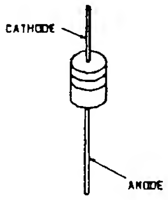
CATHODE
ANODE

SECTION 7
EXPLODED VIEWS

NOTE:
- Items with no part number and no description are not stocked because they are seldom required for routine service.
- The construction parts of an assembled part are indicated with a collation number in the remark column.
- Items marked " ★ " are not stocked since they are seldom required for routine service. Some delay should be anticipated when ordering these items.

The components identified by shading and mark ⚠ are critical for safety.
Replace only with part number specified.

7-1. CHASSIS

● :	BVTP3 x 12	7-685-648-79
■ :	BVTP4 x 16	7-685-663-79
▲ :	BVTT4 x 8	7-682-561-04
○ :	BVTP3 x 8	7-685-646-79

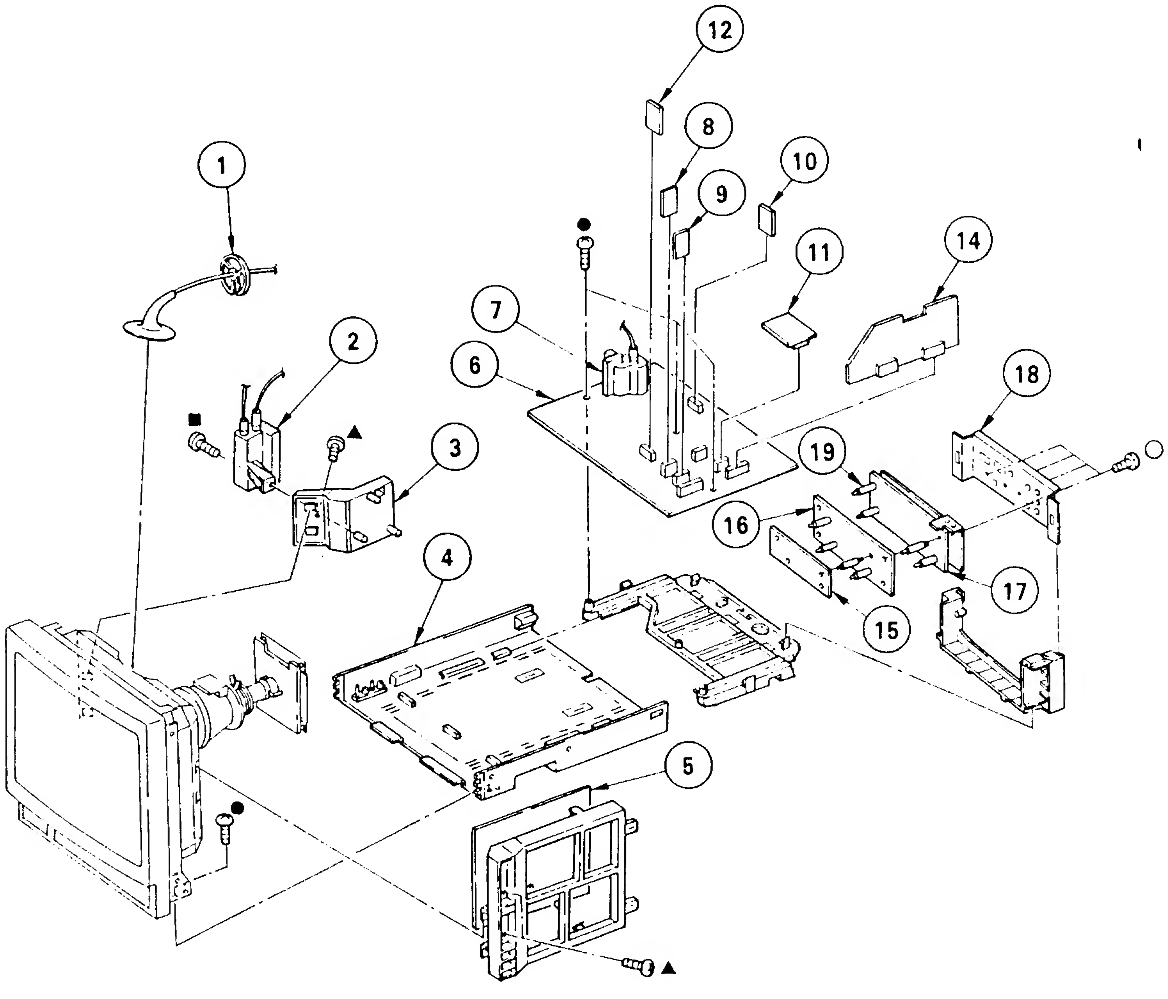

REF.NO.	PART NO.	DESCRIPTION	REMARK
1	⚠*3-704-372-01	HOLDER, HV CABLE	
2	⚠.1-237-614-12	RESISTOR ASSY, HIGH-VOLTAGE	
3	*4-391-842-01	BRACKET, HVR	
4	X-4391-805-1	CABINET ASSY, BOTTOM	
5	*A-1245-456-A	FE BOARD, COMPLETE	
6	*A-1296-520-A	A BOARD, COMPLETE	
7	⚠.1-439-395-12	TRANSFORMER ASSY, FLYBACK	
8	*1-629-149-11	W BOARD	
9	*1-629-151-11	XA BOARD	
10	*1-629-150-11	Y BOARD	
11	*1-629-148-11	V BOARD	
12	*1-629-219-11	U BOARD (PVM-1440QM ONLY)	
14	*A-1135-564-A	BA BOARD, COMPLETE (PVM-1440QM ONLY)	
	*A-1135-573-A	BA BOARD, COMPLETE (PVM-1442QM/ 1444QM ONLY)	
15	*A-1270-249-A	QE BOARD, COMPLETE (PVM-1442QM ONLY)	
16	*A-1270-267-A	QG BOARD, COMPLETE (PVM-1440QM ONLY)	
	*A-1270-248-A	QD BOARD, COMPLETE (PVM-1442QM ONLY)	
	*A-1270-246-A	QB BOARD, COMPLETE (PVM-1444QM ONLY)	
17	*A-1270-266-A	QF BOARD, COMPLETE (PVM-1440QM ONLY)	
	*A-1270-247-A	QC BOARD, COMPLETE (PVM-1442QM ONLY)	
	*A-1270-245-A	QA BOARD, COMPLETE (PVM-1444QM ONLY)	
18	4-391-843-32	PLATE, TERMINAL (PVM-1440QM ONLY)	
	4-391-843-12	PLATE, TERMINAL (PVM-1442QM ONLY)	
	4-391-843-02	PLATE, TERMINAL (PVM-1444QM ONLY)	
19	*3-682-419-01	HOLDER, P.C.B	

7-2. PICTURE TUBE

● :	BVTP3 x 12	7-685-648-79
■ :	BVTP4 x 16	7-685-663-79

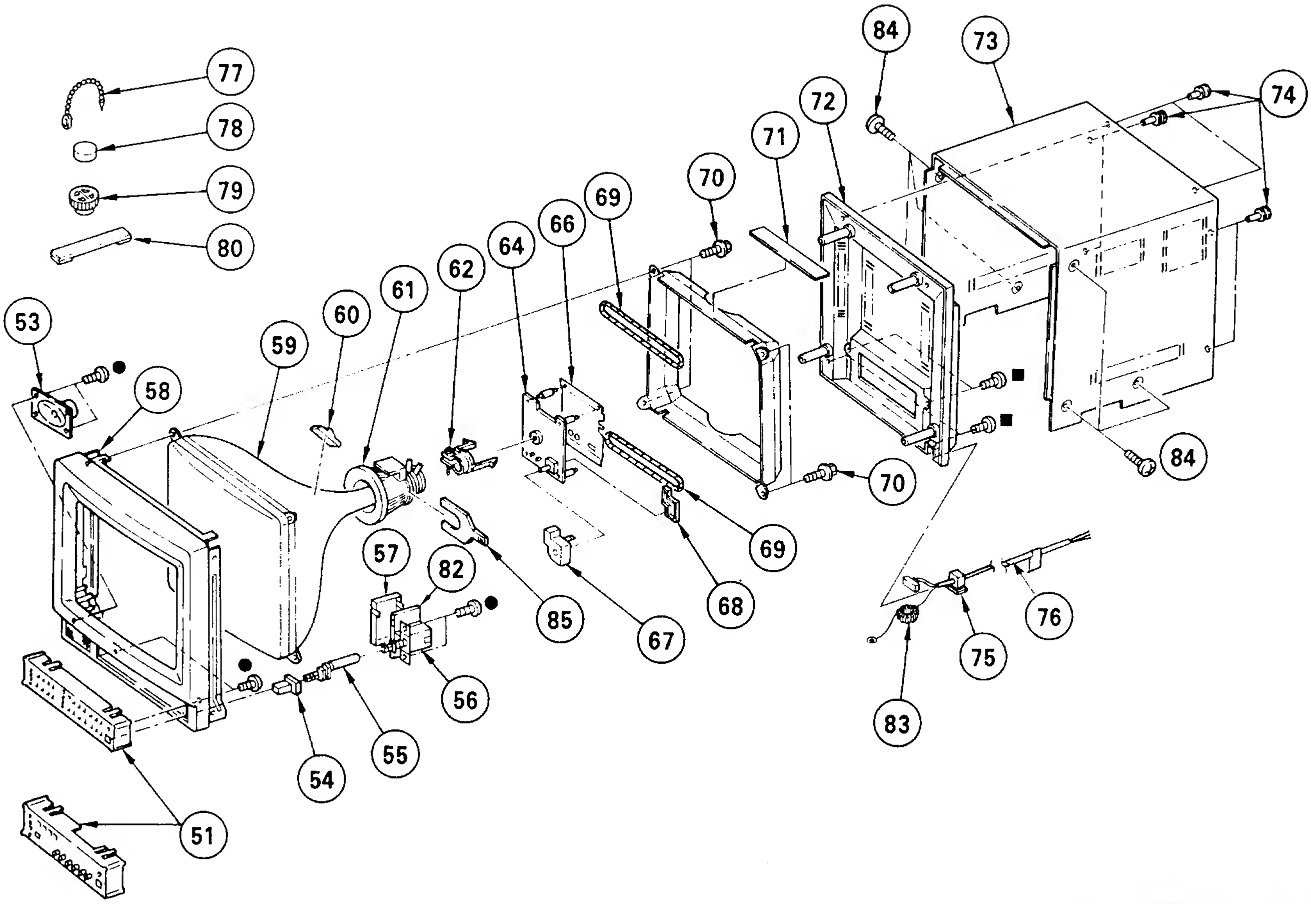

The components identified by shading and mark ⚠ are critical for safety.
Replace only with part number specified.

REF.NO.	PART NO.	DESCRIPTION	REMARK
51	1-466-113-11	CONTROL UNIT (PVM-1440QM ONLY)	
	1-466-076-11	CONTROL UNIT (PVM-1442QM ONLY)	
	1-466-075-11	CONTROL UNIT (PVM-1444QM ONLY)	
53	1-544-063-11	SPEAKER	
54	4-374-839-11	BUTTON (A)	
55	4-391-824-01	JOINT	
56	⚠.1-554-967-12	SWITCH, PUSH (AC POWER)(1 KEY)	
57	*4-391-820-01	COVER, AC SWITCH	
58	X-4391-804-1	BEZEL ASSY (PVM-1442QM/44QM ONLY)	
	X-4391-804-2	BEZEL ASSY (PVM-1440QM ONLY)	
59	⚠.8-736-254-05	PICTURE TUBE (A34JHS10X) (PVM-1440QM ONLY)	
	⚠.8-734-621-05	PICTURE TUBE (M34KBE21X) (PVM-1442QM/1444QM ONLY)	
60	3-703-961-01	SPACER, DY	
61	⚠.1-451-329-11	DEFLECTION YOKE (Y14FZA)	
62	*4-382-050-01	BAND, C PC BOARD	
64	*A-1330-986-A	C BOARD, COMPLETE	
66	*4-391-835-01	PLATE (C), SHIELD (PVM-1442QM ONLY)	
67	*4-374-912-01	COVER (MAIN), CV VOL	
68	*4-374-913-01	COVER (REAR LID), CV VOL	
69	⚠.1-426-145-13	COIL, DEGAUSSING	
70	4-307-249-00	SCREW (5), TAPPING	
71	4-391-833-01	CLOTH, PROTECTION	
72	4-391-839-01	COVER, REAR	
73	X-4391-810-1	COVER ASSY, TOP	
74	4-391-825-01	RIVET, NYLON	
75	⚠.*4-364-745-01	BUSHING, AC CORD	
76	⚠.1-574-389-12	CORD, POWER	
77	4-308-870-00	CLIP, LEAD WIRE	
78	1-452-032-00	MAGNET, DISK; 10MM φ	
79	1-452-094-00	MAGNET, ROTATABLE DISK; 15MM φ	
80	X-4309-608-0	PERMALLOY ASSY, CONVERGENCE	
82	*1-629-153-11	J BOARD	
83	1-543-604-11	CORE, RING	
84	4-847-802-11	SCREW (OS), CASE, CLAW	
85	1-452-277-00	MAGNET BMC	

SECTION 8
ELECTRICAL PARTS LIST

NOTE:

The components identified by shading and mark ⚠ are critical for safety.
Replace only with part number specified.

- Items marked " * " are not stocked since they are seldom required for routine service. Some delay should be anticipated when ordering these items.
- All variable and adjustable resistors have characteristic curve B, unless otherwise noted.

RESISTORS
- All resistors are in ohms
- F : nonflammable

When indicating parts by reference number, please include the board name.

CAPACITORS
- MF : μF, PF : μμF

COILS
- MMH : mH, UH : μH

- ※ : Selected to yield optimum performance.

REF.NO.	PART NO.	DESCRIPTION			REMARK
	*A-1135-573-A	BA BOARD, COMPLETE (PVM-1442QM / ****************** PVM-1444QM ONLY)			
	*A-1135-564-A	BA BOARD, COMPLETE (PVM-1440QM ONLY) ******************			

<CONNECTOR>

BA1	*1-565-491-11	CONNECTOR, BOARD TO BOARD 15P			
BA2	*1-565-491-11	CONNECTOR, BOARD TO BOARD 15P			

<FILTER>

BPF243	1-236-363-11	FILTER, BAND PASS			
BPF244	1-236-364-11	FILTER, BAND PASS			

<CAPACITOR>

C201	1-124-120-11	ELECT	220MF	20%	25V
C202	1-102-125-00	CERAMIC	0.0047MF	10%	50V
C203	1-102-125-00	CERAMIC	0.0047MF	10%	50V
C207	1-124-477-11	ELECT	47MF	20%	25V
C208	1-124-477-11	ELECT	47MF	20%	25V
C209	1-124-477-11	ELECT	47MF	20%	25V
C210	1-124-477-11	ELECT	47MF	20%	25V
C211	1-124-477-11	ELECT	47MF	20%	25V
C212	1-124-477-11	ELECT	47MF	20%	25V
C213	1-124-477-11	ELECT	47MF	20%	25V
C214	1-101-004-00	CERAMIC	0.01MF		50V
C221	1-124-902-00	ELECT	0.47MF	20%	50V
C222	1-124-464-11	ELECT	0.22MF	20%	50V
C223	1-102-959-00	CERAMIC	22PF	5%	50V
C224	1-101-888-00	CERAMIC	68PF	5%	50V
C230	1-124-120-11	ELECT	220MF	20%	25V
C240	1-101-004-00	CERAMIC	0.01MF		50V
C241	1-124-120-11	ELECT	220MF	20%	25V
C242	1-124-478-11	ELECT	100MF	20%	25V
C243	1-124-120-11	ELECT	220MF	20%	25V
C245	1-101-004-00	CERAMIC	0.01MF		50V
C246	1-123-875-11	ELECT	10MF	20%	50V
C247	1-101-004-00	CERAMIC	0.01MF		50V
C248	1-102-125-00	CERAMIC	0.0047MF	10%	50V
C250	1-161-021-11	CERAMIC	0.047MF	10%	25V
C251	1-102-125-00	CERAMIC	0.0047MF	10%	50V
C252	1-102-125-00	CERAMIC	0.0047MF	10%	50V
C253	1-102-125-00	CERAMIC	0.0047MF	10%	50V
C254	1-102-125-00	CERAMIC	0.0047MF	10%	50V
C255	1-101-004-00	CERAMIC	0.01MF		50V
C265	1-102-978-00	CERAMIC	220PF	5%	50V
C266	1-101-003-00	CERAMIC	0.0047MF		50V
C267	1-124-478-11	ELECT	100MF	20%	25V
C268	1-101-003-00	CERAMIC	0.0047MF		50V

REF.NO.	PART NO.	DESCRIPTION			REMARK
C269	1-102-978-00	CERAMIC	220PF	5%	50V
C271	1-101-004-00	CERAMIC	0.01MF		50V
C272	1-101-002-00	CERAMIC	0.0022MF		50V
C273	1-101-002-00	CERAMIC	0.0022MF		50V
C280	1-108-624-11	MYLAR	0.0068MF	10%	100V
C281	1-124-478-11	ELECT	100MF	20%	25V
C292	1-101-004-00	CERAMIC	0.01MF		50V
C401	1-123-875-11	ELECT	10MF	20%	50V
C402	1-101-888-00	CERAMIC	68PF	5%	50V
C403	1-102-116-00	CERAMIC	680PF	10%	50V
C404	1-136-161-00	FILM	0.047MF	5%	50V
C405	1-102-074-00	CERAMIC	0.001MF	10%	50V
C406	1-124-477-11	ELECT	47MF	20%	25V
C407	1-101-890-00	CERAMIC	75PF	5%	50V
C408	1-102-960-00	CERAMIC	27PF	5%	50V
C409	1-136-165-00	FILM	0.1MF	5%	50V
C410	1-136-165-00	FILM	0.1MF	5%	50V
C411	1-136-165-00	FILM	0.1MF	5%	50V
C412	1-102-129-00	CERAMIC	0.01MF	10%	50V
C413	1-124-499-11	ELECT	1MF	20%	50V
C414	1-136-173-00	FILM	0.47MF	5%	50V
C415	1-123-875-11	ELECT	10MF	20%	50V
C416	1-102-118-00	CERAMIC	0.0012MF	10%	50V
C417	1-124-477-11	ELECT	47MF	20%	25V
C418	1-124-499-11	ELECT	1MF	20%	50V
C419	1-124-478-11	ELECT	100MF	20%	25V
C420	1-136-165-00	FILM	0.1MF	5%	50V
C421	1-102-960-00	CERAMIC	27PF	5%	50V
C422	1-136-165-00	FILM	0.1MF	5%	50V
C423	1-123-875-11	ELECT	10MF	20%	50V
C424	1-136-165-00	FILM	0.1MF	5%	50V
C425	1-101-361-00	CERAMIC	150PF	5%	50V
C426	1-101-890-00	CERAMIC	75PF	5%	50V
C427	1-124-120-11	ELECT	220MF	20%	25V
C428	1-124-477-11	ELECT	47MF	20%	25V
C429	1-124-477-11	ELECT	47MF	20%	25V
C430	1-101-004-00	CERAMIC	0.01MF		50V
C431	1-101-884-00	CERAMIC	56PF	5%	50V
C432	1-101-004-00	CERAMIC	0.01MF		50V
C433	1-124-478-11	ELECT	100MF	20%	25V
C434	1-101-884-00	CERAMIC	56PF	5%	50V
C435	1-101-884-00	CERAMIC	56PF	5%	50V
C441	1-102-959-00	CERAMIC	22PF	5%	50V
C442	1-161-021-11	CERAMIC	0.047MF	10%	25V

<FILTER BLOCK>

CFM201	1-464-880-11	FILTER BLOCK, COM (CFB-2)			

BA

<MODULE>

REF.NO.	PART NO.	DESCRIPTION	REMARK
CTR210	1-236-366-11	MODULE, TRAP	
CTR211	1-236-365-11	MODULE, TRAP	
PCM290	1-808-628-11	MODULE, PHASE PHM-1	
SEP270	1-808-654-11	MODULE	

<DIODE>

REF.NO.	PART NO.	DESCRIPTION	REMARK
D210	8-719-911-19	DIODE 1SS119	
D211	8-719-911-19	DIODE 1SS119	
D212	8-719-911-19	DIODE 1SS119	
D240	8-719-110-16	DIODE RD10ES-B1	
D280	8-719-911-19	DIODE 1SS119	
D401	8-719-911-19	DIODE 1SS119	
D402	8-719-911-19	DIODE 1SS119	

<DELAY LINE>

REF.NO.	PART NO.	DESCRIPTION	REMARK
DL230	1-415-632-11	DELAY LINE, Y	

<IC>

REF.NO.	PART NO.	DESCRIPTION	REMARK
FPG280	8-749-920-73	IC BX7595	
IC201	8-759-800-81	IC LA7016	
IC210	8-759-240-53	IC TC4053BP	
IC250	8-759-800-81	IC LA7016	
IC260	8-759-208-14	IC TC4066BPHB	
IC261	8-759-208-14	IC TC4066BPHB	
IC401	8-751-750-00	IC CX-175	

<COIL>

REF.NO.	PART NO.	DESCRIPTION		REMARK
L280	1-410-509-11	INDUCTOR	10UH	
L282	1-410-470-11	INDUCTOR	10UH	
L401	1-410-087-31	INDUCTOR	10MMH	
L402	1-408-411-00	INDUCTOR	15UH	
L403	1-404-496-00	COIL		
L404	1-408-411-00	INDUCTOR	15UH	
L405	1-404-496-00	COIL		
L406	1-410-470-11	INDUCTOR	10UH	
L408	1-410-336-11	INDUCTOR	220UH	

<TRANSISTOR>

REF.NO.	PART NO.	DESCRIPTION	REMARK
Q201	8-729-119-78	TRANSISTOR 2SC2785-HFE	
Q210	8-729-119-78	TRANSISTOR 2SC2785-HFE	
Q211	8-729-119-76	TRANSISTOR 2SA1175-HFE	
Q212	8-729-900-89	TRANSISTOR DTC144ES	
Q213	8-729-900-89	TRANSISTOR DTC144ES	
Q214	8-729-119-78	TRANSISTOR 2SC2785-HFE	
Q221	8-729-900-89	TRANSISTOR DTC144ES	
Q222	8-729-900-63	TRANSISTOR DTA124ES	
Q230	8-729-119-78	TRANSISTOR 2SC2785-HFE	
Q231	8-729-119-78	TRANSISTOR 2SC2785-HFE	
Q232	8-729-119-78	TRANSISTOR 2SC2785-HFE	
Q233	8-729-119-76	TRANSISTOR 2SA1175-HFE	
Q234	8-729-119-78	TRANSISTOR 2SC2785-HFE	
Q240	8-729-177-42	TRANSISTOR 2SD774-3	
Q241	8-729-119-78	TRANSISTOR 2SC2785-HFE	
Q242	8-729-119-78	TRANSISTOR 2SC2785-HFE	
Q243	8-729-119-78	TRANSISTOR 2SC2785-HFE	
Q258	8-729-119-78	TRANSISTOR 2SC2785-HFE	
Q259	8-729-119-78	TRANSISTOR 2SC2785-HFE	
Q260	8-729-900-89	TRANSISTOR DTC144ES	
Q261	8-729-119-78	TRANSISTOR 2SC2785-HFE	
Q262	8-729-119-78	TRANSISTOR 2SC2785-HFE	
Q263	8-729-119-78	TRANSISTOR 2SC2785-HFE	
Q264	8-729-119-76	TRANSISTOR 2SA1175-HFE	
Q265	8-729-119-78	TRANSISTOR 2SC2785-HFE	
Q280	8-729-900-89	TRANSISTOR DTC144ES	
Q401	8-729-119-78	TRANSISTOR 2SC2785-HFE	
Q402	8-729-119-78	TRANSISTOR 2SC2785-HFE	
Q403	8-729-119-78	TRANSISTOR 2SC2785-HFE	
Q404	8-729-119-78	TRANSISTOR 2SC2785-HFE	
Q405	8-729-900-63	TRANSISTOR DTA124ES	
Q406	8-729-119-78	TRANSISTOR 2SC2785-HFE	
Q407	8-729-119-78	TRANSISTOR 2SC2785-HFE	
Q408	8-729-119-78	TRANSISTOR 2SC2785-HFE	
Q409	8-729-119-78	TRANSISTOR 2SC2785-HFE	
Q410	8-729-119-78	TRANSISTOR 2SC2785-HFE	
Q411	8-729-119-76	TRANSISTOR 2SA1175-HFE	

<RESISTOR>

REF.NO.	PART NO.	DESCRIPTION				REMARK
JW95	1-249-411-11	CARBON	330	5%	1/4W	
R201	1-249-435-11	CARBON	33K	5%	1/4W	
R202	1-249-435-11	CARBON	33K	5%	1/4W	
R203	1-249-405-11	CARBON	100	5%	1/4W	
R204	1-249-421-11	CARBON	2.2K	5%	1/4W	
R205	1-249-433-11	CARBON	22K	5%	1/4W	
R206	1-249-432-11	CARBON	18K	5%	1/4W	
R207	1-249-409-11	CARBON	220	5%	1/4W	
R210	1-249-437-11	CARBON	47K	5%	1/4W	
R211	1-249-437-11	CARBON	47K	5%	1/4W	
R212	1-249-437-11	CARBON	47K	5%	1/4W	
R213	1-249-429-11	CARBON	10K	5%	1/4W	
R214	1-249-433-11	CARBON	22K	5%	1/4W	
R215	1-249-437-11	CARBON	47K	5%	1/4W	
R216	1-249-429-11	CARBON	10K	5%	1/4W	
R217	1-249-429-11	CARBON	10K	5%	1/4W	
R218	1-249-425-11	CARBON	4.7K	5%	1/4W	
R219	1-249-405-11	CARBON	100	5%	1/4W	
R220	1-249-428-11	CARBON	8.2K	5%	1/4W	
R221	1-249-423-11	CARBON	3.3K	5%	1/4W	
R222	1-249-439-11	CARBON	68K	5%	1/4W	
R224	1-249-439-11	CARBON	68K	5%	1/4W	
R225	1-249-439-11	CARBON	68K	5%	1/4W	
R226	1-249-439-11	CARBON	68K	5%	1/4W	
R227	1-249-386-11	CARBON	2.7	5%	1/4W	F
R228	1-249-433-11	CARBON	22K	5%	1/4W	
R229	1-249-433-11	CARBON	22K	5%	1/4W	
R230	1-249-429-11	CARBON	10K	5%	1/4W	
R231	1-249-422-11	CARBON	2.7K	5%	1/4W	
R232	1-249-415-11	CARBON	680	5%	1/4W	
R233	1-249-415-11	CARBON	680	5%	1/4W	
R234	1-249-411-11	CARBON	330	5%	1/4W	
R235	1-249-416-11	CARBON	820	5%	1/4W	
R236	1-249-411-11	CARBON	330	5%	1/4W	
R237	1-249-411-11	CARBON	330	5%	1/4W	
R238	1-249-405-11	CARBON	100	5%	1/4W	
R239	1-249-417-11	CARBON	1K	5%	1/4W	
R240	1-249-407-11	CARBON	150	5%	1/4W	
R241	1-247-895-00	CARBON	470K	5%	1/4W	
R242	1-249-421-11	CARBON	2.2K	5%	1/4W	
R243	1-249-435-11	CARBON	33K	5%	1/4W	
R244	1-249-435-11	CARBON	33K	5%	1/4W	
R245	1-249-422-11	CARBON	2.7K	5%	1/4W	

The components identified by shading and mark ⚠ are critical for safety.
Replace only with part number specified.

REF.NO.	PART NO.	DESCRIPTION				REMARK
R246	1-249-435-11	CARBON	33K	5%	1/4W	
R247	1-249-435-11	CARBON	33K	5%	1/4W	
R248	1-249-422-11	CARBON	2.7K	5%	1/4W	
R249	1-249-432-11	CARBON	18K	5%	1/4W	
R250	1-249-405-11	CARBON	100	5%	1/4W	
R251	1-249-433-11	CARBON	22K	5%	1/4W	
R252	1-249-421-11	CARBON	2.2K	5%	1/4W	
R253	1-249-415-11	CARBON	680	5%	1/4W	
R254	1-249-420-11	CARBON	1.8K	5%	1/4W	
R255	1-249-417-11	CARBON	1K	5%	1/4W	
R256	1-249-405-11	CARBON	100	5%	1/4W	
R257	1-249-417-11	CARBON	1K	5%	1/4W	
R258	1-249-405-11	CARBON	100	5%	1/4W	
R259	1-249-441-11	CARBON	100K	5%	1/4W	
R260	1-249-425-11	CARBON	4.7K	5%	1/4W	
R261	1-247-891-00	CARBON	330K	5%	1/4W	
R262	1-249-435-11	CARBON	33K	5%	1/4W	
R263	1-249-422-11	CARBON	2.7K	5%	1/4W	
R264	1-249-422-11	CARBON	2.7K	5%	1/4W	
R268	1-249-417-11	CARBON	1K	5%	1/4W	
R270	1-249-417-11	CARBON	1K	5%	1/4W	
R271	1-249-417-11	CARBON	1K	5%	1/4W	
R272	1-249-417-11	CARBON	1K	5%	1/4W	
R273	1-249-426-11	CARBON	5.6K	5%	1/4W	
R274	1-249-429-11	CARBON	10K	5%	1/4W	
R275	1-249-413-11	CARBON	470	5%	1/4W	
R276	1-249-417-11	CARBON	1K	5%	1/4W	
R277	1-247-891-00	CARBON	330K	5%	1/4W	
R278	1-247-891-00	CARBON	330K	5%	1/4W	
R279	1-249-429-11	CARBON	10K	5%	1/4W	
R280	1-249-429-11	CARBON	10K	5%	1/4W	
R281	1-249-429-11	CARBON	10K	5%	1/4W	
R282	1-249-429-11	CARBON	10K	5%	1/4W	
R283	1-249-429-11	CARBON	10K	5%	1/4W	
R284	1-249-429-11	CARBON	10K	5%	1/4W	
R285	1-249-429-11	CARBON	10K	5%	1/4W	
R290	1-249-441-11	CARBON	100K	5%	1/4W	
R291	1-249-413-11	CARBON	470	5%	1/4W	
R292	1-249-435-11	CARBON	33K	5%	1/4W	
R293	1-249-435-11	CARBON	33K	5%	1/4W	
R294	1-249-405-11	CARBON	100	5%	1/4W	
R295	1-249-405-11	CARBON	100	5%	1/4W	
R296	1-249-405-11	CARBON	100	5%	1/4W	
R297	1-249-405-11	CARBON	100	5%	1/4W	
R299	1-249-429-11	CARBON	10K	5%	1/4W	
R401	1-249-419-11	CARBON	1.5K	5%	1/4W	
R403	1-247-881-00	CARBON	120K	5%	1/4W	
R405	1-215-429-00	METAL	2.2K	1%	1/6W	
R406	1-249-429-11	CARBON	10K	5%	1/4W	
R407	1-249-422-11	CARBON	2.7K	5%	1/4W	
R408	1-249-414-11	CARBON	560	5%	1/4W	
R409	1-249-421-11	CARBON	2.2K	5%	1/4W	
R410	1-249-419-11	CARBON	1.5K	5%	1/4W	
R411	1-249-419-11	CARBON	1.5K	5%	1/4W	
R412	1-249-423-11	CARBON	3.3K	5%	1/4W	
R413	1-249-434-11	CARBON	27K	5%	1/4W	
R414	1-247-895-00	CARBON	470K	5%	1/4W	
R415	1-249-412-11	CARBON	390	5%	1/4W	
R416	1-249-415-11	CARBON	680	5%	1/4W	
R417	1-249-409-11	CARBON	220	5%	1/4W	
R418	1-249-425-11	CARBON	4.7K	5%	1/4W	
R419	1-249-433-11	CARBON	22K	5%	1/4W	
R420	1-215-432-00	METAL	3K	1%	1/6W	
R421	1-249-419-11	CARBON	1.5K	5%	1/4W	

REF.NO.	PART NO.	DESCRIPTION				REMARK
R422	1-249-419-11	CARBON	1.5K	5%	1/4W	
R423	1-249-421-11	CARBON	2.2K	5%	1/4W	
R424	1-249-429-11	CARBON	10K	5%	1/4W	
R425	1-249-414-11	CARBON	560	5%	1/4W	
R426	1-249-422-11	CARBON	2.7K	5%	1/4W	
R427	1-249-423-11	CARBON	3.3K	5%	1/4W	
R428	1-249-412-11	CARBON	390	5%	1/4W	
R429	1-249-425-11	CARBON	4.7K	5%	1/4W	
R430	1-249-408-11	CARBON	180	5%	1/4W	
R431	1-249-411-11	CARBON	330	5%	1/4W	
R432	1-249-422-11	CARBON	2.7K	5%	1/4W	
R433	1-249-437-11	CARBON	47K	5%	1/4W	
R435	1-249-433-11	CARBON	22K	5%	1/4W	
R436	1-249-437-11	CARBON	47K	5%	1/4W	
R437	1-249-437-11	CARBON	47K	5%	1/4W	
R438	1-249-437-11	CARBON	47K	5%	1/4W	
R439	1-249-426-11	CARBON	5.6K	5%	1/4W	
R440	1-249-437-11	CARBON	47K	5%	1/4W	
R441	1-249-440-11	CARBON	82K	5%	1/4W	
R442	1-249-405-11	CARBON	100	5%	1/4W	
R443	1-249-405-11	CARBON	100	5%	1/4W	
R444	1-249-432-11	CARBON	18K	5%	1/4W	
R445	1-249-432-11	CARBON	18K	5%	1/4W	
R446	1-249-437-11	CARBON	47K	5%	1/4W	
R447	1-249-437-11	CARBON	47K	5%	1/4W	
R448	1-249-435-11	CARBON	33K	5%	1/4W	
R449	1-249-417-11	CARBON	1K	5%	1/4W	

<VARIABLE RESISTOR>

RV290	1-228-994-00	RES, ADJ, CARBON 10K
RV291	1-228-991-00	RES, ADJ, CARBON 2.2K
RV292	1-228-991-00	RES, ADJ, CARBON 2.2K

<TRANSFORMER>

T401	1-404-584-11	COIL

****

*A-1245-456-A FE BOARD, COMPLETE
****

*4-341-751-01	EYELET
*4-341-752-01	EYELET
4-363-414-00	SPACER, MICA

<CAPACITOR>

C602	⚠.1-161-830-51	CERAMIC	0.0047MF		500V
C603	⚠.1-161-830-51	CERAMIC	0.0047MF		500V
C604	⚠.1-161-830-51	CERAMIC	0.0047MF		500V
C605	⚠.1-161-830-51	CERAMIC	0.0047MF		500V
C606	1-125-222-41	ELECT(BLOCK)	330MF	20%	400V
C607	⚠.1-136-360-51	FILM	0.22MF	20%	250V
C608	⚠.1-136-360-51	FILM	0.22MF	20%	250V
C611	1-102-973-00	CERAMIC	100PF	5%	50V
C612	1-161-754-00	CERAMIC	0.001MF	10%	3KV
C613	1-123-946-00	ELECT	4.7MF	20%	250V
C614	1-136-067-00	FILM	0.0036MF	3%	2KV
C615	1-129-765-00	FILM	0.047MF	10%	200V
C616	1-124-798-11	ELECT	1MF	20%	160V
C617	1-124-902-00	ELECT	0.47MF	20%	50V

The components identified by shading and mark ⚠ are critical for safety.
Replace only with part number specified.

FE

REF.NO.	PART NO.	DESCRIPTION			REMARK
C618	1-162-318-11	CERAMIC	0.001MF	10%	500V
C619	1-123-875-11	ELECT	10MF	20%	50V
C620	1-124-446-11	ELECT	47MF	20%	10V
C621	1-130-475-00	FILM	0.0022MF	5%	50V
C622	1-104-067-00	POLYSTYRENE	390PF	5%	50V
C623	1-126-233-11	ELECT	22MF	20%	25V
C624	1-162-318-11	CERAMIC	0.001MF	10%	500V
C625	1-124-463-00	ELECT	0.1MF	20%	50V
C626	1-161-973-00	CERAMIC	220PF	10%	400V
C627	1-136-066-00	FILM	0.003MF	3%	2KV
C631	1-162-116-00	CERAMIC	680PF	10%	2KV
C633	1-162-131-11	CERAMIC	220PF	10%	2KV
C651	1-125-494-11	ELECT(BLOCK)	560MF	20%	160V
C654	1-102-030-00	CERAMIC	330PF	10%	500V
C656	1-102-030-00	CERAMIC	330PF	10%	500V
C657	1-161-973-00	CERAMIC	220PF	10%	400V
C658	1-124-499-11	ELECT	1MF	20%	50V
C659	1-108-614-11	MYLAR	0.001MF	10%	100V
C660 ⚠.	1-162-578-51	CERAMIC	0.0047MF	20%	400V
C661 ⚠.	1-162-578-51	CERAMIC	0.0047MF	20%	400V
C671	1-126-103-11	ELECT	470MF	20%	16V
C674	1-126-105-11	ELECT	1000MF	20%	35V
C675	1-162-116-00	CERAMIC	680PF	10%	2KV
C676	1-102-973-00	CERAMIC	100PF	5%	50V

<DIODE>

D601 ⚠.	8-719-503-06	DIODE S3WB60Z
D605	8-719-911-19	DIODE 1SS119
D606	8-719-911-19	DIODE 1SS119
D607	8-719-110-90	DIODE RD39ES-B4
D608	8-719-110-90	DIODE RD39ES-B4
D611	8-719-118-34	DIODE RD110E-B
D612	8-719-925-06	DIODE ERC25-06S
D613	8-719-200-02	DIODE 10E2
D614	8-719-925-06	DIODE ERC25-06S
D615	8-719-109-97	DIODE RD6.8E-B2
D616	8-719-925-06	DIODE ERC25-06S
D617	8-719-911-19	DIODE 1SS119
D619	8-719-911-19	DIODE 1SS119
D620	8-719-925-06	DIODE ERC25-06S
D622	8-719-100-74	DIODE RD16E-B2
D651	8-719-300-33	DIODE RU3AM
D652	8-719-200-02	DIODE 10E2
D653	8-719-300-76	DIODE RH-1A
D654	8-719-911-19	DIODE 1SS119
D655	8-719-110-41	DIODE RD15ES-B2

<CONNECTOR>

F1	*1-568-106-11	PIN, CONNECTOR 7P
F3	*1-508-765-00	PIN, CONNECTOR (5MM PITCH) 3P
F5	*1-508-768-00	PIN, CONNECTOR (5MM PITCH) 6P
F6	*1-506-371-00	PIN, CONNECTOR 2P
F7	*1-568-106-11	PIN, CONNECTOR 7P

<FUSE>

F601 ⚠.	1-532-350-11	FUSE, TIME-LAG 4A/250V
	*1-533-189-11	HOLDER, FUSE; F601

<IC>

IC601	8-759-100-75	IC UPC1394C
IC602	8-719-939-00	IC PC111S

REF.NO.	PART NO.	DESCRIPTION	REMARK
IC651	8-759-927-49	IC IR9431	

<COIL>

L621	1-407-365-00	COIL, CHOKE
L622	1-408-226-00	INDUCTOR 82UH
L623	1-410-397-21	FERRITE BEAD INDUCTOR
L624 ⚠.	1-410-396-31	FERRITE BEAD INDUCTOR
L625 ⚠.	1-410-396-31	FERRITE BEAD INDUCTOR
L626 ⚠	1-459-946-11	COIL, NOISE FILTER
L627 ⚠	1-459-946-11	COIL, NOISE FILTER

<IC LINK>

PS602⚠.	1-532-838-21	LINK, IC 0.8A/125V

<TRANSISTOR>

Q611	8-729-119-80	TRANSISTOR 2SC2688-LK
Q612	8-729-119-80	TRANSISTOR 2SC2688-LK
Q613	8-729-802-14	TRANSISTOR 2SC3460
Q614	8-729-119-80	TRANSISTOR 2SC2688-LK
Q615	8-729-119-78	TRANSISTOR 2SC2785-HFE
Q617	8-729-119-78	TRANSISTOR 2SC2785-HFE

<RESISTOR>

R601	1-205-712-00	WIREWOUND	3.9	5%	20W	
R602 ⚠.	1-214-947-21	METAL	2.7M	1%	1/2W	
R603 ⚠.	1-247-721-51	CARBON	4.7K	5%	1/4W	F
R604 ⚠.	1-247-721-51	CARBON	4.7K	5%	1/4W	F
R605	1-202-720-00	SOLID	1.2M	10%	1/2W	
R606	1-249-423-11	CARBON	3.3K	5%	1/4W	
R610	1-249-405-11	CARBON	100	5%	1/4W	
R611	1-216-444-11	METAL OXIDE	82K	5%	1W	F
R612	1-216-444-11	METAL OXIDE	82K	5%	1W	F
R613	1-249-496-11	CARBON	100K	5%	1/2W	F
R614	1-215-923-00	METAL OXIDE	10K	5%	3W	F
R615	1-247-887-00	CARBON	220K	5%	1/4W	
R616	1-247-711-11	CARBON	680	5%	1/4W	
R617	1-247-725-11	CARBON	10K	5%	1/4W	
R618	1-249-396-11	CARBON	18	5%	1/4W	
R619	1-247-710-11	CARBON	560	5%	1/4W	F
R620	1-217-192-21	WIREWOUND	0.22	10%	2W	F
R621	1-249-423-11	CARBON	3.3K	5%	1/4W	
R622	1-249-434-11	CARBON	27K	5%	1/4W	
R623	1-215-457-00	METAL	33K	1%	1/6W	
R624	1-249-429-11	CARBON	10K	5%	1/4W	
R625	1-247-726-11	CARBON	33K	5%	1/4W	
R626	1-249-411-11	CARBON	330	5%	1/4W	
R627	1-249-438-11	CARBON	56K	5%	1/4W	
R628	1-247-887-00	CARBON	220K	5%	1/4W	
R629	1-249-428-11	CARBON	8.2K	5%	1/4W	
R630	1-249-436-11	CARBON	39K	5%	1/4W	
R631	1-249-424-11	CARBON	3.9K	5%	1/4W	
R632	1-247-753-11	CARBON	1.2K	5%	1/2W	F
R633	1-249-441-11	CARBON	100K	5%	1/4W	
R634	1-249-417-11	CARBON	1K	5%	1/4W	
R635	1-205-928-11	WIREWOUND	180	10%	10W	
R636	1-205-927-11	WIREWOUND	2.2K	10%	10W	
R637	1-216-465-11	METAL OXIDE	27K	5%	2W	F
R640	1-249-438-11	CARBON	56K	5%	1/4W	
R644	1-247-885-00	CARBON	180K	5%	1/4W	

The components identified by shading and mark ⚠ are critical for safety.
Replace only with part number specified.

FE QA

REF.NO.	PART NO.	DESCRIPTION				REMARK
R648	1-247-887-00	CARBON	220K	5%	1/4W	
R651	1-247-881-00	CARBON	120K	5%	1/4W	
R652	1-215-924-00	METAL OXIDE	15K	5%	3W	F
R653	1-249-417-11	CARBON	1K	5%	1/4W	
R654	1-247-881-00	CARBON	120K	5%	1/4W	
R655	1-249-469-11	CARBON	100K	5%	1/4W	
R656	1-247-895-00	CARBON	470K	5%	1/4W	
R657	1-247-883-00	CARBON	150K	5%	1/4W	
R658 ⚠.	1-247-289-11	CARBON	8.2M	5%	1W	
R661	1-249-443-11	CARBON	0.47	5%	1/4W	F
R665	1-249-420-11	CARBON	1.8K	5%	1/4W	
R669	1-249-443-11	CARBON	0.47	5%	1/4W	F
R671	1-249-410-11	CARBON	270	5%	1/4W	
R682	1-215-923-00	METAL OXIDE	10K	5%	3W	F
R688	1-249-427-11	CARBON	6.8K	5%	1/4W	
R691	1-216-489-11	METAL OXIDE	27K	5%	3W	F
R692	1-202-719-00	SOLID	1M	10%	1/2W	

<VARIABLE RESISTOR>

RV601	1-230-504-11	RES, ADJ, CARBON 220

<TRANSFORMER>

T602	1-437-079-00	TRANSFORMER, HORIZONTAL DRIVE
T603 ⚠.	1-448-895-11	SRT
T604 ⚠.	1-421-776-11	LFT
T605 ⚠.	1-421-758-11	TRANSFORMER, LINE FILTER (LFT)

<THERMISTOR>

TH611	1-800-200-00	THERMISTOR S-3K
THP601 ⚠	1-808-059-21	THERMISTOR, POSITIVE

****

*A-1270-245-A QA BOARD, COMPLETE (PVM-1444QM ONLY)
****

1-537-191-11	TERMINAL BOARD, INPUT/OUTPUT
1-537-201-11	TERMINAL BOARD, INPUT OUTPUT
*4-379-104-01	INSULATOR, SLIDE SW

<CAPACITOR>

REF.NO.	PART NO.	DESCRIPTION				REMARK
C101	1-124-589-11	ELECT	47MF	20%	16V	
C102	1-126-160-11	ELECT	1MF	20%	50V	
C103	1-126-160-11	ELECT	1MF	20%	50V	
C105	1-126-160-11	ELECT	1MF	20%	50V	
C106	1-126-160-11	ELECT	1MF	20%	50V	
C107	1-126-160-11	ELECT	1MF	20%	50V	
C108	1-124-589-11	ELECT	47MF	20%	16V	
C109	1-126-160-11	ELECT	1MF	20%	50V	
C110	1-126-160-11	ELECT	1MF	20%	50V	
C111	1-126-160-11	ELECT	1MF	20%	50V	
C112	1-124-589-11	ELECT	47MF	20%	16V	
C113	1-124-589-11	ELECT	47MF	20%	16V	
C114	1-124-589-11	ELECT	47MF	20%	16V	
C115	1-124-589-11	ELECT	47MF	20%	16V	
C116	1-161-021-11	CERAMIC	0.047MF	10%	25V	
C117	1-124-589-11	ELECT	47MF	20%	16V	
C118	1-124-589-11	ELECT	47MF	20%	16V	
C119	1-126-160-11	ELECT	1MF	20%	50V	
C120	1-126-160-11	ELECT	1MF	20%	50V	
C121	1-124-589-11	ELECT	47MF	20%	16V	
C122	1-124-589-11	ELECT	47MF	20%	16V	
C123	1-124-589-11	ELECT	47MF	20%	16V	
C124	1-124-589-11	ELECT	47MF	20%	16V	
C125	1-124-589-11	ELECT	47MF	20%	16V	
C137	1-126-160-11	ELECT	1MF	20%	50V	
C138	1-126-160-11	ELECT	1MF	20%	50V	
C139	1-124-589-11	ELECT	47MF	20%	16V	
C140	1-124-589-11	ELECT	47MF	20%	16V	
C141	1-124-589-11	ELECT	47MF	20%	16V	
C153	1-124-589-11	ELECT	47MF	20%	16V	
C161	1-124-589-11	ELECT	47MF	20%	16V	
C162	1-161-021-11	CERAMIC	0.047MF	10%	25V	
C163	1-161-021-11	CERAMIC	0.047MF	10%	25V	

<IC>

IC101	8-759-800-81	IC LA7016
IC102	8-759-710-31	IC NJM2243S
IC103	8-759-800-81	IC LA7016

<TRANSISTOR>

Q106	8-729-119-78	TRANSISTOR 2SC2785-HFE

<RESISTOR>

R101	1-249-429-11	CARBON	10K	5%	1/4W
R103	1-249-405-11	CARBON	100	5%	1/4W
R104	1-249-433-11	CARBON	22K	5%	1/4W
R105	1-249-433-11	CARBON	22K	5%	1/4W
R106	1-249-429-11	CARBON	10K	5%	1/4W
R107	1-249-417-11	CARBON	1K	5%	1/4W
R108	1-249-429-11	CARBON	10K	5%	1/4W
R110	1-249-405-11	CARBON	100	5%	1/4W
R111	1-249-433-11	CARBON	22K	5%	1/4W
R112	1-249-433-11	CARBON	22K	5%	1/4W
R113	1-247-104-00	CARBON	75	5%	1/4W
R115	1-247-104-00	CARBON	75	5%	1/4W
R117	1-249-405-11	CARBON	100	5%	1/4W
R118	1-249-433-11	CARBON	22K	5%	1/4W
R119	1-249-433-11	CARBON	22K	5%	1/4W
R120	1-249-429-11	CARBON	10K	5%	1/4W
R121	1-249-405-11	CARBON	100	5%	1/4W
R122	1-247-104-00	CARBON	75	5%	1/4W
R123	1-249-405-11	CARBON	100	5%	1/4W
R124	1-249-421-11	CARBON	2.2K	5%	1/4W
R125	1-249-429-11	CARBON	10K	5%	1/4W
R126	1-247-104-00	CARBON	75	5%	1/4W
R127	1-247-104-00	CARBON	75	5%	1/4W
R128	1-247-104-00	CARBON	75	5%	1/4W
R129	1-247-104-00	CARBON	75	5%	1/4W
R130	1-247-104-00	CARBON	75	5%	1/4W
R131	1-247-104-00	CARBON	75	5%	1/4W
R132	1-249-417-11	CARBON	1K	5%	1/4W
R168	1-249-429-11	CARBON	10K	5%	1/4W
R177	1-249-405-11	CARBON	100	5%	1/4W
R178	1-249-433-11	CARBON	22K	5%	1/4W
R179	1-249-433-11	CARBON	22K	5%	1/4W
R184	1-249-420-11	CARBON	1.8K	5%	1/4W

<VARIABLE RESISTOR>

RV101	1-228-848-00	RES, VAR, CARBON 10K

QA **QB**

REF.NO.	PART NO.	DESCRIPTION				REMARK

<SWITCH>

S101	1-570-145-11	SWITCH, SLIDE
S102	1-570-145-11	SWITCH, SLIDE

****

*A-1270-246-A QB BOARD, COMPLETE (PVM-1444QM ONLY)
****

<CAPACITOR>

C126	1-124-477-11	ELECT	47MF	20%	25V
C127	1-124-477-11	ELECT	47MF	20%	25V
C128	1-124-477-11	ELECT	47MF	20%	25V
C129	1-161-021-11	CERAMIC	0.047MF	10%	25V
C130	1-124-477-11	ELECT	47MF	20%	25V
C131	1-124-477-11	ELECT	47MF	20%	25V
C132	1-124-477-11	ELECT	47MF	20%	25V
C133	1-124-477-11	ELECT	47MF	20%	25V
C134	1-124-477-11	ELECT	47MF	20%	25V
C135	1-124-477-11	ELECT	47MF	20%	25V
C136	1-124-477-11	ELECT	47MF	20%	25V
C142	1-124-631-11	ELECT	47MF	20%	16V
C143	1-124-477-11	ELECT	47MF	20%	25V
C144	1-124-477-11	ELECT	47MF	20%	25V
C145	1-124-477-11	ELECT	47MF	20%	25V
C146	1-124-477-11	ELECT	47MF	20%	25V
C147	1-101-004-00	CERAMIC	0.01MF		50V
C148	1-101-004-00	CERAMIC	0.01MF		50V
C149	1-124-478-11	ELECT	100MF	20%	25V
C150	1-124-499-11	ELECT	1MF	20%	50V
C151	1-161-021-11	CERAMIC	0.047MF	10%	25V
C152	1-124-925-11	ELECT	2.2MF	20%	50V
C154	1-101-004-00	CERAMIC	0.01MF		50V
C169	1-124-477-11	ELECT	47MF	20%	25V

<DIODE>

D101	8-719-911-19	DIODE 1SS119
D102	8-719-911-19	DIODE 1SS119
D105	8-719-911-19	DIODE 1SS119
D106	8-719-911-19	DIODE 1SS119
D111	8-719-911-19	DIODE 1SS119
D112	8-719-911-19	DIODE 1SS119

<IC>

IC104	8-759-800-81	IC LA7016
IC105	8-759-800-81	IC LA7016
IC106	8-759-710-31	IC NJM2243S
IC107	8-759-800-81	IC LA7016
IC108	8-759-240-11	IC TC4011BP

<TRANSISTOR>

Q101	8-729-900-36	TRANSISTOR DTC124ES
Q103	8-729-119-78	TRANSISTOR 2SC2785-HFE
Q104	8-729-119-78	TRANSISTOR 2SC2785-HFE
Q110	8-729-119-76	TRANSISTOR 2SA1175-HFE
Q111	8-729-119-76	TRANSISTOR 2SA1175-HFE
Q112	8-729-119-76	TRANSISTOR 2SA1175-HFE
Q113	8-729-119-78	TRANSISTOR 2SC2785-HFE
Q114	8-729-119-78	TRANSISTOR 2SC2785-HFE
Q115	8-729-119-78	TRANSISTOR 2SC2785-HFE

REF.NO.	PART NO.	DESCRIPTION				REMARK
Q116	8-729-119-78	TRANSISTOR 2SC2785-HFE				
Q120	8-729-900-65	TRANSISTOR DTA144ES				
Q121	8-729-900-65	TRANSISTOR DTA144ES				

<CONNECTOR>

QB6	*1-560-290-00	PLUG, CONNECTOR (2.5MM PITCH)

<RESISTOR>

R133	1-249-405-11	CARBON	100	5%	1/4W
R134	1-249-433-11	CARBON	22K	5%	1/4W
R135	1-249-433-11	CARBON	22K	5%	1/4W
R137	1-249-433-11	CARBON	22K	5%	1/4W
R138	1-249-433-11	CARBON	22K	5%	1/4W
R139	1-249-405-11	CARBON	100	5%	1/4W
R140	1-249-433-11	CARBON	22K	5%	1/4W
R141	1-249-433-11	CARBON	22K	5%	1/4W
R142	1-249-433-11	CARBON	22K	5%	1/4W
R143	1-249-433-11	CARBON	22K	5%	1/4W
R144	1-249-412-11	CARBON	390	5%	1/4W
R145	1-249-405-11	CARBON	100	5%	1/4W
R146	1-249-436-11	CARBON	39K	5%	1/4W
R147	1-249-435-11	CARBON	33K	5%	1/4W
R149	1-249-433-11	CARBON	22K	5%	1/4W
R150	1-249-433-11	CARBON	22K	5%	1/4W
R151	1-249-429-11	CARBON	10K	5%	1/4W
R152	1-249-429-11	CARBON	10K	5%	1/4W
R153	1-249-417-11	CARBON	1K	5%	1/4W
R154	1-249-422-11	CARBON	2.7K	5%	1/4W
R155	1-215-383-00	METAL	27	1%	1/6W
R161	1-215-397-00	METAL	100	1%	1/6W
R162	1-215-397-00	METAL	100	1%	1/6W
R163	1-249-422-11	CARBON	2.7K	5%	1/4W
R164	1-215-431-00	METAL	2.7K	1%	1/6W
R165	1-249-422-11	CARBON	2.7K	5%	1/4W
R166	1-215-431-00	METAL	2.7K	1%	1/6W
R167	1-249-422-11	CARBON	2.7K	5%	1/4W
R169	1-249-429-11	CARBON	10K	5%	1/4W
R170	1-249-437-11	CARBON	47K	5%	1/4W
R171	1-249-437-11	CARBON	47K	5%	1/4W
R172	1-249-417-11	CARBON	1K	5%	1/4W
R173	1-249-405-11	CARBON	100	5%	1/4W
R175	1-249-433-11	CARBON	22K	5%	1/4W
R176	1-249-433-11	CARBON	22K	5%	1/4W
R180	1-249-417-11	CARBON	1K	5%	1/4W
R181	1-249-417-11	CARBON	1K	5%	1/4W
R182	1-249-409-11	CARBON	220	5%	1/4W
R183	1-249-409-11	CARBON	220	5%	1/4W
R186	1-249-435-11	CARBON	33K	5%	1/4W
R187	1-249-417-11	CARBON	1K	5%	1/4W
R188	1-249-435-11	CARBON	33K	5%	1/4W
R189	1-249-433-11	CARBON	22K	5%	1/4W
R190	1-249-433-11	CARBON	22K	5%	1/4W
R191	1-249-420-11	CARBON	1.8K	5%	1/4W
R192	1-249-420-11	CARBON	1.8K	5%	1/4W
R193	1-249-420-11	CARBON	1.8K	5%	1/4W
R194	1-215-419-00	METAL	820	1%	1/6W
R197	1-249-417-11	CARBON	1K	5%	1/4W
R198	1-249-429-11	CARBON	10K	5%	1/4W
R199	1-249-417-11	CARBON	1K	5%	1/4W
R201	1-249-405-11	CARBON	100	5%	1/4W
R202	1-249-405-11	CARBON	100	5%	1/4W

REF.NO.	PART NO.	DESCRIPTION				REMARK
R203	1-249-405-11	CARBON	100	5%	1/4W	
R204	1-249-425-11	CARBON	4.7K	5%	1/4W	
R205	1-249-441-11	CARBON	100K	5%	1/4W	
R206	1-249-433-11	CARBON	22K	5%	1/4W	
R207	1-249-441-11	CARBON	100K	5%	1/4W	
R208	1-249-415-11	CARBON	680	5%	1/4W	
R209	1-249-405-11	CARBON	100	5%	1/4W	
R210	1-249-405-11	CARBON	100	5%	1/4W	
R211	1-249-417-11	CARBON	1K	5%	1/4W	
R212	1-249-420-11	CARBON	1.8K	5%	1/4W	
R213	1-249-426-11	CARBON	5.6K	5%	1/4W	
R214	1-215-436-00	METAL	4.3K	1%	1/6W	
R215	1-215-436-00	METAL	4.3K	1%	1/6W	

****

*A-1270-247-A QC BOARD, COMPLETE (PVM-1442QM ONLY)
****

	1-537-191-11	TERMINAL BOARD, INPUT/OUTPUT
	1-537-192-11	TERMINAL BOARD, INPUT/OUTPUT
	*4-379-104-01	INSULATOR, SLIDE SW

<CAPACITOR>

C101	1-124-589-11	ELECT	47MF	20%	16V
C102	1-126-160-11	ELECT	1MF	20%	50V
C103	1-126-160-11	ELECT	1MF	20%	50V
C104	1-161-021-11	CERAMIC	0.047MF	10%	25V
C105	1-126-160-11	ELECT	1MF	20%	50V
C106	1-126-160-11	ELECT	1MF	20%	50V
C107	1-124-589-11	ELECT	47MF	20%	16V
C108	1-124-589-11	ELECT	47MF	20%	16V
C109	1-124-589-11	ELECT	47MF	20%	16V
C110	1-124-589-11	ELECT	47MF	20%	16V
C111	1-124-589-11	ELECT	47MF	20%	16V
C112	1-124-589-11	ELECT	47MF	20%	16V
C113	1-124-589-11	ELECT	47MF	20%	16V
C114	1-126-160-11	ELECT	1MF	20%	50V
C115	1-126-160-11	ELECT	1MF	20%	50V
C116	1-124-589-11	ELECT	47MF	20%	16V
C117	1-126-157-11	ELECT	10MF	20%	16V
C118	1-126-157-11	ELECT	10MF	20%	16V
C119	1-126-157-11	ELECT	10MF	20%	16V
C120	1-124-589-11	ELECT	47MF	20%	16V
C122	1-124-589-11	ELECT	47MF	20%	16V
C123	1-124-589-11	ELECT	47MF	20%	16V

<IC>

IC101	8-759-800-81	IC LA7016

<TRANSISTOR>

Q122	8-729-119-78	TRANSISTOR 2SC2785-HFE

<RESISTOR>

R101	1-249-429-11	CARBON	10K	5%	1/4W
R102	1-249-405-11	CARBON	100	5%	1/4W
R103	1-249-429-11	CARBON	10K	5%	1/4W
R104	1-249-405-11	CARBON	100	5%	1/4W
R105	1-247-104-00	CARBON	75	5%	1/4W
R106	1-249-405-11	CARBON	100	5%	1/4W
R107	1-247-104-00	CARBON	75	5%	1/4W
R108	1-249-405-11	CARBON	100	5%	1/4W
R109	1-247-104-00	CARBON	75	5%	1/4W
R110	1-247-104-00	CARBON	75	5%	1/4W
R111	1-249-429-11	CARBON	10K	5%	1/4W
R112	1-249-405-11	CARBON	100	5%	1/4W
R113	1-249-429-11	CARBON	10K	5%	1/4W
R114	1-247-104-00	CARBON	75	5%	1/4W
R115	1-249-405-11	CARBON	100	5%	1/4W
R116	1-247-704-11	CARBON	220	5%	1/4W
R117	1-247-703-11	CARBON	180	5%	1/4W
R118	1-247-703-11	CARBON	180	5%	1/4W
R119	1-249-417-11	CARBON	1K	5%	1/4W
R121	1-249-417-11	CARBON	1K	5%	1/4W
R122	1-215-393-00	METAL	68	1%	1/6W
R123	1-249-417-11	CARBON	1K	5%	1/4W
R125	1-249-405-11	CARBON	100	5%	1/4W
R126	1-249-433-11	CARBON	22K	5%	1/4W
R127	1-249-433-11	CARBON	22K	5%	1/4W
R128	1-249-429-11	CARBON	10K	5%	1/4W
R129	1-247-104-00	CARBON	75	5%	1/4W
R130	1-247-104-00	CARBON	75	5%	1/4W
R131	1-247-104-00	CARBON	75	5%	1/4W
R132	1-249-417-11	CARBON	1K	5%	1/4W
R133	1-247-104-00	CARBON	75	5%	1/4W
R134	1-249-417-11	CARBON	1K	5%	1/4W
R220	1-215-429-00	METAL	2.2K	1%	1/6W
R221	1-215-429-00	METAL	2.2K	1%	1/6W
R222	1-215-429-00	METAL	2.2K	1%	1/6W
R254	1-249-420-11	CARBON	1.8K	5%	1/4W
R298	1-249-431-11	CARBON	15K	5%	1/4W

<VARIABLE RESISTOR>

RV101	1-228-848-00	RES, VAR, CARBON 10K
RV102	1-228-848-00	RES, VAR, CARBON 10K

<SWITCH>

S101	1-570-145-11	SWITCH, SLIDE

****

*A-1270-248-A QD BOARD, COMPLETE (PVM-1442QM ONLY)
****

<CAPACITOR>

C121	1-126-094-11	ELECT	4.7MF	20%	25V
C124	1-101-004-00	CERAMIC	0.01MF		50V
C125	1-124-477-11	ELECT	47MF	20%	16V
C126	1-124-589-11	ELECT	47MF	20%	16V
C127	1-101-004-00	CERAMIC	0.01MF		50V
C128	1-124-589-11	ELECT	47MF	20%	16V
C129	1-124-589-11	ELECT	47MF	20%	16V
C130	1-124-584-00	ELECT	100MF	20%	10V
C131	1-161-021-11	CERAMIC	0.047MF	10%	25V
C132	1-102-963-00	CERAMIC	33PF	5%	50V
C133	1-126-157-11	ELECT	10MF	20%	16V
C134	1-161-021-11	CERAMIC	0.047MF	10%	25V
C135	1-106-375-12	MYLAR	0.022MF	10%	100V
C136	1-101-004-00	CERAMIC	0.01MF		50V
C137	1-124-589-11	ELECT	47MF	20%	16V
C138	1-124-589-11	ELECT	47MF	20%	16V
C139	1-126-160-11	ELECT	1MF	20%	50V

REF.NO.	PART NO.	DESCRIPTION			REMARK
C140	1-124-589-11	ELECT	47MF	20%	16V
C141	1-102-965-00	CERAMIC	39PF	5%	50V
C142	1-102-965-00	CERAMIC	39PF	5%	50V
C143	1-102-965-00	CERAMIC	39PF	5%	50V
C144	1-126-094-11	ELECT	4.7MF	20%	25V
C145	1-161-021-11	CERAMIC	0.047MF	10%	25V
C146	1-124-589-11	ELECT	47MF	20%	16V
C147	1-124-589-11	ELECT	47MF	20%	16V
C148	1-126-157-11	ELECT	10MF	20%	16V
C149	1-130-728-00	FILM	0.0022MF	10%	50V
C150	1-130-483-00	MYLAR	0.01MF	5%	50V
C151	1-130-471-00	FILM	0.001MF	10%	50V
C172	1-101-005-00	CERAMIC	0.022MF		50V
C173	1-136-169-00	FILM	0.22MF	5%	50V
C174	1-102-965-00	CERAMIC	39PF	5%	50V

<DIODE>

D102	8-719-110-03	DIODE RD7.5ES-B2
D103	8-719-911-19	DIODE 1SS119
D104	8-719-911-19	DIODE 1SS119
D105	8-719-911-19	DIODE 1SS119
D106	8-719-109-85	DIODE RD5.1ES-B2
D107	8-719-109-85	DIODE RD5.1ES-B2
D113	8-719-911-19	DIODE 1SS119
D116	8-719-911-19	DIODE 1SS119

<IC>

IC102	8-759-900-09	IC SN74LS09N
IC103	8-759-901-38	IC SN74LS138N
IC104	8-759-901-36	IC SN74LS136N
IC105	8-759-900-11	IC SN74LS11N
IC106	8-759-800-81	IC LA7016
IC107	8-759-933-23	IC BA236

<FILTER MODULE>

LP101	1-235-988-11	FILTER MODULE, LOW PASS

<TRANSISTOR>

Q101	8-729-119-78	TRANSISTOR 2SC2785-HFE
Q102	8-729-119-78	TRANSISTOR 2SC2785-HFE
Q103	8-729-119-78	TRANSISTOR 2SC2785-HFE
Q104	8-729-119-78	TRANSISTOR 2SC2785-HFE
Q105	8-729-119-78	TRANSISTOR 2SC2785-HFE
Q106	8-729-119-78	TRANSISTOR 2SC2785-HFE
Q107	8-729-119-78	TRANSISTOR 2SC2785-HFE
Q108	8-729-119-78	TRANSISTOR 2SC2785-HFE
Q109	8-729-119-78	TRANSISTOR 2SC2785-HFE
Q110	8-729-900-36	TRANSISTOR DTC124ES
Q111	8-729-900-89	TRANSISTOR DTC144ES
Q112	8-729-119-78	TRANSISTOR 2SC2785-HFE
Q113	8-729-119-78	TRANSISTOR 2SC2785-HFE
Q114	8-729-900-36	TRANSISTOR DTC124ES
Q115	8-729-119-78	TRANSISTOR 2SC2785-HFE
Q125	8-729-119-76	TRANSISTOR 2SA1175-HFE
Q131	8-729-119-76	TRANSISTOR 2SA1175-HFE
Q132	8-729-119-76	TRANSISTOR 2SA1175-HFE
Q135	8-729-900-65	TRANSISTOR DTA144ES

<RESISTOR>

REF.NO.	PART NO.	DESCRIPTION				REMARK
R135	1-249-417-11	CARBON	1K	5%	1/4W	
R136	1-249-411-11	CARBON	330	5%	1/4W	
R137	1-249-418-11	CARBON	1.2K	5%	1/4W	
R138	1-249-421-11	CARBON	2.2K	5%	1/4W	
R139	1-249-424-11	CARBON	3.9K	5%	1/4W	
R140	1-249-417-11	CARBON	1K	5%	1/4W	
R141	1-249-425-11	CARBON	4.7K	5%	1/4W	
R142	1-249-435-11	CARBON	33K	5%	1/4W	
R143	1-249-435-11	CARBON	33K	5%	1/4W	
R144	1-249-417-11	CARBON	1K	5%	1/4W	
R145	1-249-411-11	CARBON	330	5%	1/4W	
R146	1-249-417-11	CARBON	1K	5%	1/4W	
R147	1-249-411-11	CARBON	330	5%	1/4W	
R148	1-249-429-11	CARBON	10K	5%	1/4W	
R149	1-249-425-11	CARBON	4.7K	5%	1/4W	
R150	1-249-417-11	CARBON	1K	5%	1/4W	
R151	1-249-429-11	CARBON	10K	5%	1/4W	
R152	1-249-429-11	CARBON	10K	5%	1/4W	
R153	1-249-405-11	CARBON	100	5%	1/4W	
R154	1-249-405-11	CARBON	100	5%	1/4W	
R155	1-249-433-11	CARBON	22K	5%	1/4W	
R156	1-249-433-11	CARBON	22K	5%	1/4W	
R157	1-249-430-11	CARBON	12K	5%	1/4W	
R158	1-249-417-11	CARBON	1K	5%	1/4W	
R159	1-247-706-11	CARBON	330	5%	1/4W	
R160	1-247-706-11	CARBON	330	5%	1/4W	
R161	1-247-706-11	CARBON	330	5%	1/4W	
R162	1-249-426-11	CARBON	5.6K	5%	1/4W	
R163	1-249-421-11	CARBON	2.2K	5%	1/4W	
R164	1-249-421-11	CARBON	2.2K	5%	1/4W	
R165	1-249-425-11	CARBON	4.7K	5%	1/4W	
R166	1-249-425-11	CARBON	4.7K	5%	1/4W	
R167	1-247-721-11	CARBON	4.7K	5%	1/4W	
R168	1-249-421-11	CARBON	2.2K	5%	1/4W	
R169	1-249-433-11	CARBON	22K	5%	1/4W	
R170	1-249-437-11	CARBON	47K	5%	1/4W	
R171	1-247-725-11	CARBON	10K	5%	1/4W	
R172	1-249-405-11	CARBON	100	5%	1/4W	
R173	1-247-716-11	CARBON	1.8K	5%	1/4W	
R174	1-249-432-11	CARBON	18K	5%	1/4W	
R175	1-249-408-11	CARBON	180	5%	1/4W	
R176	1-249-437-11	CARBON	47K	5%	1/4W	
R178	1-249-418-11	CARBON	1.2K	5%	1/4W	
R179	1-247-713-11	CARBON	1K	5%	1/4W	
R220	1-249-429-11	CARBON	10K	5%	1/4W	
R221	1-249-437-11	CARBON	47K	5%	1/4W	
R222	1-249-437-11	CARBON	47K	5%	1/4W	
R223	1-249-417-11	CARBON	1K	5%	1/4W	
R224	1-249-429-11	CARBON	10K	5%	1/4W	
R225	1-249-425-11	CARBON	4.7K	5%	1/4W	
R226	1-249-409-11	CARBON	220	5%	1/4W	
R231	1-249-432-11	CARBON	18K	5%	1/4W	
R235	1-249-425-11	CARBON	4.7K	5%	1/4W	
R236	1-249-417-11	CARBON	1K	5%	1/4W	
R237	1-249-420-11	CARBON	1.8K	5%	1/4W	
R241	1-249-408-11	CARBON	180	5%	1/4W	
R242	1-249-405-11	CARBON	100	5%	1/4W	
R244	1-249-405-11	CARBON	100	5%	1/4W	
R260	1-249-433-11	CARBON	22K	5%	1/4W	
R261	1-249-433-11	CARBON	22K	5%	1/4W	
R263	1-249-405-11	CARBON	100	5%	1/4W	
R299	1-249-420-11	CARBON	1.8K	5%	1/4W	

QD QE QF

REF.NO.	PART NO.	DESCRIPTION	REMARK

<VARIABLE RESISTOR>

REF.NO.	PART NO.	DESCRIPTION
RV103	1-228-995-00	RES, ADJ, CARBON 22K

<SWITCH>

REF.NO.	PART NO.	DESCRIPTION
S102	1-553-977-41	SWITCH, SLIDE

****

*A-1270-249-A QE BOARD, COMPLETE(PVM-1442QM ONLY)
****

<CAPACITOR>

REF.NO.	PART NO.	DESCRIPTION			
C152	1-101-004-00	CERAMIC	0.01MF		50V
C154	1-123-875-11	ELECT	10MF	20%	50V
C155	1-124-499-11	ELECT	1MF	20%	50V
C156	1-124-499-11	ELECT	1MF	20%	50V
C157	1-126-160-11	ELECT	1MF	20%	50V
C158	1-124-477-11	ELECT	47MF	20%	25V
C159	1-126-160-11	ELECT	1MF	20%	50V
C160	1-124-499-11	ELECT	1MF	20%	50V
C161	1-124-477-11	ELECT	47MF	20%	16V
C162	1-124-477-11	ELECT	47MF	20%	16V
C163	1-124-477-11	ELECT	47MF	20%	16V
C164	1-161-021-11	CERAMIC	0.047MF	10%	25V
C165	1-124-477-11	ELECT	47MF	20%	16V
C166	1-124-477-11	ELECT	47MF	20%	16V
C167	1-124-477-11	ELECT	47MF	20%	16V
C168	1-124-589-11	ELECT	47MF	20%	16V
C169	1-161-021-11	CERAMIC	0.047MF	10%	25V
C170	1-124-477-11	ELECT	47MF	20%	25V
C171	1-124-925-11	ELECT	2.2MF	20%	50V

<DIODE>

REF.NO.	PART NO.	DESCRIPTION
D108	8-719-911-19	DIODE 1SS119
D109	8-719-911-19	DIODE 1SS119
D110	8-719-911-19	DIODE 1SS119
D111	8-719-911-19	DIODE 1SS119
D112	8-719-911-19	DIODE 1SS119
D114	8-719-911-19	DIODE 1SS119
D115	8-719-911-19	DIODE 1SS119

<IC>

REF.NO.	PART NO.	DESCRIPTION
IC108	8-759-800-81	IC LA7016
IC109	8-759-800-81	IC LA7016
IC110	8-759-800-81	IC LA7016
IC111	8-759-710-31	IC NJM2243S

<TRANSISTOR>

REF.NO.	PART NO.	DESCRIPTION
Q116	8-729-119-78	TRANSISTOR 2SC2785-HFE
Q117	8-729-119-78	TRANSISTOR 2SC2785-HFE
Q118	8-729-119-76	TRANSISTOR 2SA1175-HFE
Q119	8-729-900-36	TRANSISTOR DTC124ES
Q120	8-729-119-78	TRANSISTOR 2SC2785-HFE
Q121	8-729-119-78	TRANSISTOR 2SC2785-HFE
Q127	8-729-900-65	TRANSISTOR DTA144ES

<CONNECTOR>

REF.NO.	PART NO.	DESCRIPTION
QE1	*1-564-515-11	PLUG, CONNECTOR 12P
QE2	*1-564-516-11	PLUG, CONNECTOR 13P
QE3	*1-560-290-00	PLUG, CONNECTOR (2.5MM PITCH)

<RESISTOR>

REF.NO.	PART NO.	DESCRIPTION			
R180	1-249-405-11	CARBON	100	5%	1/4W
R181	1-249-412-11	CARBON	390	5%	1/4W
R182	1-249-417-11	CARBON	1K	5%	1/4W
R183	1-249-436-11	CARBON	39K	5%	1/4W
R184	1-249-435-11	CARBON	33K	5%	1/4W
R185	1-249-405-11	CARBON	100	5%	1/4W
R186	1-249-433-11	CARBON	22K	5%	1/4W
R187	1-249-433-11	CARBON	22K	5%	1/4W
R188	1-249-405-11	CARBON	100	5%	1/4W
R189	1-249-433-11	CARBON	22K	5%	1/4W
R190	1-249-433-11	CARBON	22K	5%	1/4W
R192	1-249-437-11	CARBON	47K	5%	1/4W
R193	1-249-429-11	CARBON	10K	5%	1/4W
R194	1-249-433-11	CARBON	22K	5%	1/4W
R195	1-249-433-11	CARBON	22K	5%	1/4W
R196	1-249-405-11	CARBON	100	5%	1/4W
R197	1-249-421-11	CARBON	2.2K	5%	1/4W
R198	1-249-421-11	CARBON	2.2K	5%	1/4W
R199	1-249-441-11	CARBON	100K	5%	1/4W
R200	1-249-435-11	CARBON	33K	5%	1/4W
R201	1-249-428-11	CARBON	8.2K	5%	1/4W
R202	1-249-417-11	CARBON	1K	5%	1/4W
R203	1-249-429-11	CARBON	10K	5%	1/4W
R204	1-249-428-11	CARBON	8.2K	5%	1/4W
R205	1-249-405-11	CARBON	100	5%	1/4W
R206	1-249-429-11	CARBON	10K	5%	1/4W
R207	1-249-429-11	CARBON	10K	5%	1/4W
R208	1-249-417-11	CARBON	1K	5%	1/4W
R209	1-249-405-11	CARBON	100	5%	1/4W
R210	1-249-433-11	CARBON	22K	5%	1/4W
R211	1-249-433-11	CARBON	22K	5%	1/4W
R212	1-249-433-11	CARBON	22K	5%	1/4W
R213	1-249-433-11	CARBON	22K	5%	1/4W
R215	1-249-405-11	CARBON	100	5%	1/4W
R216	1-249-411-11	CARBON	330	5%	1/4W
R217	1-249-433-11	CARBON	22K	5%	1/4W
R251	1-249-417-11	CARBON	1K	5%	1/4W
R252	1-249-417-11	CARBON	1K	5%	1/4W
R253	1-249-417-11	CARBON	1K	5%	1/4W
R265	1-249-415-11	CARBON	680	5%	1/4W

****

*A-1270-266-A QF BOARD, COMPLETE (PVM-1440QM ONLY)
****

REF.NO.	PART NO.	DESCRIPTION
	1-537-210-11	TERMINAL BOARD
	1-537-211-11	TERMINAL BOARD
	*4-379-104-01	INSULATOR, SLIDE SW

<CAPACITOR>

REF.NO.	PART NO.	DESCRIPTION			
C101	1-124-589-11	ELECT	47MF	20%	16V
C102	1-126-160-11	ELECT	1MF	20%	50V
C103	1-126-160-11	ELECT	1MF	20%	50V
C105	1-161-021-11	CERAMIC	0.047MF	10%	25V
C106	1-126-160-11	ELECT	1MF	20%	50V
C107	1-126-160-11	ELECT	1MF	20%	50V
C108	1-124-589-11	ELECT	47MF	20%	16V
C109	1-124-589-11	ELECT	47MF	20%	16V
C110	1-126-160-11	ELECT	1MF	20%	50V

QF **QG**

REF.NO.	PART NO.	DESCRIPTION				REMARK
C111	1-124-589-11	ELECT	47MF	20%	16V	
C112	1-126-160-11	ELECT	1MF	20%	50V	
C113	1-124-589-11	ELECT	47MF	20%	16V	
C114	1-161-021-11	CERAMIC	0.047MF	10%	25V	
C116	1-124-589-11	ELECT	47MF	20%	16V	
C117	1-124-589-11	ELECT	47MF	20%	16V	
C118	1-124-589-11	ELECT	47MF	20%	16V	
C119	1-126-160-11	ELECT	1MF	20%	50V	
C120	1-126-160-11	ELECT	1MF	20%	50V	
C121	1-126-160-11	ELECT	1MF	20%	50V	
C122	1-124-589-11	ELECT	47MF	20%	16V	
C123	1-124-589-11	ELECT	47MF	20%	16V	
C124	1-124-589-11	ELECT	47MF	20%	16V	
C125	1-102-959-00	CERAMIC	22PF	5%	50V	
C126	1-126-160-11	ELECT	1MF	20%	50V	
C127	1-126-157-11	ELECT	10MF	20%	16V	
C128	1-126-157-11	ELECT	10MF	20%	16V	
C129	1-126-157-11	ELECT	10MF	20%	16V	
C130	1-102-965-00	CERAMIC	39PF	5%	50V	
C131	1-126-157-11	ELECT	10MF	20%	16V	
C132	1-102-947-00	CERAMIC	10PF	0.5PF	50V	
C134	1-102-947-00	CERAMIC	10PF	0.5PF	50V	
C135	1-102-947-00	CERAMIC	10PF	0.5PF	50V	
C136	1-124-589-11	ELECT	47MF	20%	16V	

<DIODE>

D101	8-719-110-08	DIODE RD8.2ES-B2
D102	8-719-110-08	DIODE RD8.2ES-B2

<IC>

IC101	8-759-710-31	IC NJM2243S
IC102	8-759-710-31	IC NJM2243S
IC103	8-759-800-81	IC LA7016

<COIL>

L101	1-410-478-11	INDUCTOR	47UH

<TRANSISTOR>

Q113	8-729-119-78	TRANSISTOR 2SC2785-HFE

<CONNECTOR>

QF6	*1-560-721-21	PLUG, CONNECTOR 2P

<RESISTOR>

R101	1-249-429-11	CARBON	10K	5%	1/4W
R104	1-249-429-11	CARBON	10K	5%	1/4W
R106	1-249-462-11	CARBON	22K	5%	1/4W
R107	1-249-433-11	CARBON	22K	5%	1/4W
R108	1-249-429-11	CARBON	10K	5%	1/4W
R109	1-247-104-00	CARBON	75	5%	1/4W
R112	1-247-104-00	CARBON	75	5%	1/4W
R114	1-249-405-11	CARBON	100	5%	1/4W
R115	1-249-433-11	CARBON	22K	5%	1/4W
R116	1-249-433-11	CARBON	22K	5%	1/4W
R117	1-247-104-00	CARBON	75	5%	1/4W
R118	1-247-104-00	CARBON	75	5%	1/4W
R119	1-249-429-11	CARBON	10K	5%	1/4W
R122	1-249-405-11	CARBON	100	5%	1/4W

REF.NO.	PART NO.	DESCRIPTION				REMARK
R123	1-249-433-11	CARBON	22K	5%	1/4W	
R124	1-249-429-11	CARBON	10K	5%	1/4W	
R125	1-249-429-11	CARBON	10K	5%	1/4W	
R126	1-247-104-00	CARBON	75	5%	1/4W	
R127	1-247-104-00	CARBON	75	5%	1/4W	
R128	1-247-104-00	CARBON	75	5%	1/4W	
R129	1-249-417-11	CARBON	1K	5%	1/4W	
R130	1-247-104-00	CARBON	75	5%	1/4W	
R131	1-247-804-11	CARBON	75	5%	1/4W	
R132	1-247-704-11	CARBON	220	5%	1/4W	
R133	1-247-704-11	CARBON	220	5%	1/4W	
R134	1-249-429-11	CARBON	10K	5%	1/4W	
R135	1-249-414-11	CARBON	560	5%	1/4W	
R136	1-247-704-11	CARBON	220	5%	1/4W	
R138	1-249-409-11	CARBON	220	5%	1/4W	
R141	1-249-433-11	CARBON	22K	5%	1/4W	
R142	1-249-429-11	CARBON	10K	5%	1/4W	
R148	1-249-433-11	CARBON	22K	5%	1/4W	
R149	1-249-433-11	CARBON	22K	5%	1/4W	
R154	1-249-433-11	CARBON	22K	5%	1/4W	
R155	1-249-433-11	CARBON	22K	5%	1/4W	
R187	1-249-405-11	CARBON	100	5%	1/4W	
R201	1-247-104-00	CARBON	75	5%	1/4W	
R202	1-249-433-11	CARBON	22K	5%	1/4W	
R206	1-249-419-11	CARBON	1.5K	5%	1/4W	
R207	1-249-401-11	CARBON	47	5%	1/4W	

<VARIABLE RESISTOR>

RV101	1-228-848-00	RES, VAR, CARBON 10K

<SWITCH>

S101	1-570-145-11	SWITCH, SLIDE
S102	1-570-145-11	SWITCH, SLIDE

****

*A-1270-267-A QG BOARD, COMPLETE (PVM-1440QM ONLY)
****

<CAPACITOR>

C137	1-124-477-11	ELECT	47MF	20%	25V
C138	1-124-477-11	ELECT	47MF	20%	25V
C139	1-101-004-00	CERAMIC	0.01MF		50V
C140	1-123-875-11	ELECT	10MF	20%	50V
C142	1-124-477-11	ELECT	47MF	20%	25V
C143	1-124-477-11	ELECT	47MF	20%	16V
C144	1-124-477-11	ELECT	47MF	20%	25V
C145	1-124-477-11	ELECT	47MF	20%	25V
C146	1-123-875-11	ELECT	10MF	20%	50V
C147	1-124-477-11	ELECT	47MF	20%	25V
C148	1-123-875-11	ELECT	10MF	20%	50V
C149	1-124-499-11	ELECT	1MF	20%	50V
C150	1-123-875-11	ELECT	10MF	20%	50V
C152	1-124-471-00	ELECT	1000MF	20%	6.3V
C153	1-124-499-11	ELECT	1MF	20%	50V
C154	1-124-477-11	ELECT	47MF	20%	25V
C155	1-102-971-00	CERAMIC	82PF	5%	50V
C156	1-101-880-00	CERAMIC	47PF	5%	50V
C157	1-124-477-11	ELECT	47MF	20%	25V
C159	1-124-477-11	ELECT	47MF	20%	25V
C161	1-124-477-11	ELECT	47MF	20%	25V

REF.NO.	PART NO.	DESCRIPTION				REMARK
C171	1-101-004-00	CERAMIC	0.01MF			50V
C172	1-124-120-11	ELECT	220MF	20%		25V
		<DIODE>				
D103	8-719-911-19	DIODE 1SS119				
D104	8-719-911-19	DIODE 1SS119				
D106	8-719-911-19	DIODE 1SS119				
D107	8-719-911-19	DIODE 1SS119				
D108	8-719-109-92	DIODE RD6.2ES-B1				
D109	8-719-110-30	DIODE RD12ES-B1				
D111	8-719-911-19	DIODE 1SS119				
D112	8-719-911-19	DIODE 1SS119				
D113	8-719-911-19	DIODE 1SS119				
		<IC>				
IC104	8-759-800-81	IC LA7016				
IC105	8-759-800-81	IC LA7016				
IC108	8-759-800-81	IC LA7016				
		<COIL>				
L111	1-408-413-00	INDUCTOR	22UH			
		<TRANSISTOR>				
Q101	8-729-900-36	TRANSISTOR DTC124ES				
Q102	8-729-119-78	TRANSISTOR 2SC2785-HFE				
Q103	8-729-119-78	TRANSISTOR 2SC2785-HFE				
Q105	8-729-177-42	TRANSISTOR 2SD774-3				
Q106	8-729-177-42	TRANSISTOR 2SD774-3				
Q107	8-729-119-76	TRANSISTOR 2SA1175-HFE				
Q108	8-729-119-78	TRANSISTOR 2SC2785-HFE				
Q109	8-729-900-36	TRANSISTOR DTC124ES				
Q111	8-729-900-36	TRANSISTOR DTC124ES				
Q112	8-729-900-65	TRANSISTOR DTA144ES				
Q114	8-729-900-65	TRANSISTOR DTA144ES				
		<RESISTOR>				
R120	1-249-417-11	CARBON	1K	5%	1/4W	
R121	1-249-405-11	CARBON	100	5%	1/4W	
R137	1-247-104-00	CARBON	75	5%	1/4W	
R139	1-249-429-11	CARBON	10K	5%	1/4W	
R143	1-249-412-11	CARBON	390	5%	1/4W	
R144	1-249-405-11	CARBON	100	5%	1/4W	
R145	1-249-436-11	CARBON	39K	5%	1/4W	
R146	1-249-435-11	CARBON	33K	5%	1/4W	
R150	1-249-405-11	CARBON	100	5%	1/4W	
R151	1-249-433-11	CARBON	22K	5%	1/4W	
R152	1-249-433-11	CARBON	22K	5%	1/4W	
R153	1-249-405-11	CARBON	100	5%	1/4W	
R156	1-249-417-11	CARBON	1K	5%	1/4W	
R157	1-249-433-11	CARBON	22K	5%	1/4W	
R158	1-249-433-11	CARBON	22K	5%	1/4W	
R161	1-249-438-11	CARBON	56K	5%	1/4W	
R162	1-249-405-11	CARBON	100	5%	1/4W	
R163	1-249-417-11	CARBON	1K	5%	1/4W	
R164	1-249-435-11	CARBON	33K	5%	1/4W	
R165	1-249-405-11	CARBON	100	5%	1/4W	
R166	1-249-433-11	CARBON	22K	5%	1/4W	
R167	1-249-433-11	CARBON	22K	5%	1/4W	
R172	1-249-405-11	CARBON	100	5%	1/4W	

REF.NO.	PART NO.	DESCRIPTION				REMARK
R173	1-215-397-00	METAL	100	1%	1/6W	
R174	1-215-399-00	METAL	120	1%	1/6W	
R175	1-215-397-00	METAL	100	1%	1/6W	
R176	1-215-865-11	METAL OXIDE	220	5%	1W	F
R177	1-247-695-11	CARBON	39	5%	1/4W	
R178	1-249-412-11	CARBON	390	5%	1/4W	
R179	1-249-435-11	CARBON	33K	5%	1/4W	
R180	1-249-434-11	CARBON	27K	5%	1/4W	
R181	1-249-414-11	CARBON	560	5%	1/4W	
R182	1-249-419-11	CARBON	1.5K	5%	1/4W	
R183	1-249-413-11	CARBON	470	5%	1/4W	
R184	1-249-413-11	CARBON	470	5%	1/4W	
R185	1-249-434-11	CARBON	27K	5%	1/4W	
R186	1-249-428-11	CARBON	8.2K	5%	1/4W	
R188	1-249-429-11	CARBON	10K	5%	1/4W	
R189	1-249-429-11	CARBON	10K	5%	1/4W	
R190	1-249-429-11	CARBON	10K	5%	1/4W	
R191	1-249-417-11	CARBON	1K	5%	1/4W	
R192	1-249-433-11	CARBON	22K	5%	1/4W	
R193	1-249-433-11	CARBON	22K	5%	1/4W	
R198	1-215-413-00	METAL	470	1%	1/6W	
R199	1-215-413-00	METAL	470	1%	1/6W	
R200	1-215-413-00	METAL	470	1%	1/6W	
R203	1-249-433-11	CARBON	22K	5%	1/4W	
R204	1-249-434-11	CARBON	27K	5%	1/4W	
R205	1-249-415-11	CARBON	680	5%	1/4W	

****

*A-1296-520-A A BOARD, COMPLETE
****

REF.NO.	PART NO.	DESCRIPTION				REMARK
	*4-329-153-00	HEAT SINK, V OUT				
	*4-341-751-01	EYELET				
	*4-341-752-01	EYELET				
	*4-363-404-00	HOLDER, IC				
	4-363-414-00	SPACER, MICA				
		<CONNECTOR>				
A1	*1-508-768-00	PIN, CONNECTOR (5MM PITCH) 6P				
A2	*1-560-123-00	PLUG, CONNECTOR (2.5MM) 3P				
A3	*1-565-498-11	CONNECTOR, BOARD TO BOARD 7P				
A4	*1-564-596-11	PLUG, CONNECTOR 15P				
A5	*1-564-596-11	PLUG, CONNECTOR 15P				
A6	*1-565-497-11	CONNECTOR, BOARD TO BOARD 6P				
A7	*1-565-498-11	CONNECTOR, BOARD TO BOARD 7P				
A8	*1-565-506-11	CONNECTOR, BOARD TO BOARD 15P				
A9	*1-565-506-11	CONNECTOR, BOARD TO BOARD 15P				
A10	*1-564-596-11	PLUG, CONNECTOR 15P				
A11	*1-564-596-41	PLUG, CONNECTOR 15P				
A13	*1-568-105-11	HOUSING, CONNECTOR 10P				
A14	*1-568-105-11	HOUSING, CONNECTOR 10P				
A16	*1-560-123-00	PLUG, CONNECTOR (2.5MM) 3P				
A17	*1-565-496-11	CONNECTOR, BOARD TO BOARD 5P				
A18	*1-564-038-00	CONNECTOR PLUG, DY (MINI) 6P				
A19	*1-508-768-00	PIN, CONNECTOR (5MM PITCH) 6P				
A20	*1-564-507-11	PLUG, CONNECTOR 4P				
A22	*1-564-505-11	PLUG, CONNECTOR 2P				
		<CAPACITOR>				
C300	1-123-875-11	ELECT	10MF	20%		50V
C301	1-124-477-11	ELECT	47MF	20%		25V
C302	1-101-884-00	CERAMIC	56PF	5%		50V
C303	1-136-173-00	FILM	0.47MF	5%		50V

The components identified by shading and mark ⚠ are critical for safety.
Replace only with part number specified.

A

REF.NO.	PART NO.	DESCRIPTION			REMARK
C304	1-101-884-00	CERAMIC	56PF	5%	50V
C305	1-136-173-00	FILM	0.47MF	5%	50V
C306	1-102-125-00	CERAMIC	0.0047MF	10%	50V
C307	1-124-477-11	ELECT	47MF	20%	25V
C308	1-124-477-11	ELECT	47MF	20%	25V
C309	1-102-125-00	CERAMIC	0.0047MF	10%	50V
C310	1-102-125-00	CERAMIC	0.0047MF	10%	50V
C311	1-102-125-00	CERAMIC	0.0047MF	10%	50V
C312	1-123-875-11	ELECT	10MF	20%	50V
C313	1-102-074-00	CERAMIC	0.001MF	10%	50V
C314	1-102-074-00	CERAMIC	0.001MF	10%	50V
C315	1-124-927-11	ELECT	4.7MF	20%	50V
C316	1-136-161-00	FILM	0.047MF	5%	50V
C317	1-136-161-00	FILM	0.047MF	5%	50V
C318	1-136-165-00	FILM	0.1MF	5%	50V
C319	1-101-004-00	CERAMIC	0.01MF		50V
C320	1-124-499-11	ELECT	1MF	20%	50V
C321	1-124-477-11	ELECT	47MF	20%	25V
C322	1-124-902-00	ELECT	0.47MF	20%	50V
C323	1-101-361-00	CERAMIC	150PF	5%	50V
C324	1-124-477-11	ELECT	47MF	20%	25V
C325	1-101-361-00	CERAMIC	150PF	5%	50V
C326	1-124-477-11	ELECT	47MF	20%	25V
C327	1-124-477-11	ELECT	47MF	20%	25V
C328	1-124-009-11	ELECT	47MF	20%	25V
C329	1-124-477-11	ELECT	47MF	20%	25V
C330	1-101-880-00	CERAMIC	47PF	5%	50V
C331	1-101-004-00	CERAMIC	0.01MF		50V
C332	1-102-971-00	CERAMIC	82PF	5%	50V
C333	1-136-165-00	FILM	0.1MF	5%	50V
C334	1-136-173-00	FILM	0.47MF	5%	50V
C335	1-136-173-00	FILM	0.47MF	5%	50V
C336	1-102-971-00	CERAMIC	82PF	5%	50V
C337	1-124-477-11	ELECT	47MF	20%	25V
C338	1-124-477-11	ELECT	47MF	20%	25V
C339	1-124-477-11	ELECT	47MF	20%	25V
C340	1-124-477-11	ELECT	47MF	20%	25V
C341	1-124-477-11	ELECT	47MF	20%	25V
C342	1-124-477-11	ELECT	47MF	20%	25V
C343	1-124-477-11	ELECT	47MF	20%	25V
C344	1-124-477-11	ELECT	47MF	20%	25V
C345	1-102-949-00	CERAMIC	12PF	5%	50V
C346	1-126-233-11	ELECT	22MF	20%	50V
C347	1-123-875-11	ELECT	10MF	20%	50V
C348	1-101-004-00	CERAMIC	0.01MF		50V
C349	1-124-120-11	ELECT	220MF	20%	25V
C350	1-101-884-00	CERAMIC	56PF	5%	50V
C351	1-102-106-00	CERAMIC	100PF	10%	50V
C352	1-102-125-00	CERAMIC	0.0047MF	10%	50V
C353	1-161-021-11	CERAMIC	0.047MF	10%	25V
C401	1-136-153-00	FILM	0.01MF	5%	50V
C402	1-136-165-00	FILM	0.1MF	5%	50V
C403	1-136-165-00	FILM	0.1MF	5%	50V
C404	1-136-169-00	FILM	0.22MF	5%	50V
C405	1-136-169-00	FILM	0.22MF	5%	50V
C406	1-136-169-00	FILM	0.22MF	5%	50V
C407	1-124-464-11	ELECT	0.22MF	20%	50V
C408	1-124-464-11	ELECT	0.22MF	20%	50V
C409	1-124-464-11	ELECT	0.22MF	20%	50V
C410	1-124-499-11	ELECT	1MF	20%	50V
C411	1-124-499-11	ELECT	1MF	20%	50V
C412	1-124-463-00	ELECT	0.1MF	20%	50V
C413	1-124-463-00	ELECT	0.1MF	20%	50V
C414	1-136-165-00	FILM	0.1MF	5%	50V
C415	1-136-165-00	FILM	0.1MF	5%	50V
C416	1-126-233-11	ELECT	22MF	20%	50V
C417	1-136-161-00	FILM	0.047MF	5%	50V
C418	1-136-153-00	FILM	0.01MF	5%	50V
C419	1-130-479-00	MYLAR	0.0047MF	5%	50V
C420	1-136-161-00	FILM	0.047MF	5%	50V
C421	1-136-153-00	FILM	0.01MF	5%	50V
C422	1-130-479-00	MYLAR	0.0047MF	5%	50V
C423	1-136-153-00	FILM	0.01MF	5%	50V
C424	1-130-479-00	MYLAR	0.0047MF	5%	50V
C425	1-124-478-11	ELECT	100MF	20%	25V
C426	1-136-161-00	FILM	0.047MF	5%	50V
C427	1-124-478-11	ELECT	100MF	20%	25V
C428	1-124-478-11	ELECT	100MF	20%	25V
C430	1-101-888-00	CERAMIC	68PF	5%	50V
C431	1-101-888-00	CERAMIC	68PF	5%	50V
C470	1-124-120-11	ELECT	220MF	20%	25V
C471	1-124-120-11	ELECT	220MF	20%	25V
C472	1-101-004-00	CERAMIC	0.01MF		50V
C473	1-124-478-11	ELECT	100MF	20%	25V
C474	1-101-004-00	CERAMIC	0.01MF		50V
C475	1-101-004-00	CERAMIC	0.01MF		50V
C476	1-101-888-00	CERAMIC	68PF	5%	50V
C477	1-101-006-00	CERAMIC	0.047MF		50V
C478	1-101-004-00	CERAMIC	0.01MF		50V
C479	1-124-478-11	ELECT	100MF	20%	25V
C480	1-101-004-00	CERAMIC	0.01MF		50V
C481	1-101-004-00	CERAMIC	0.01MF		50V
C482	1-124-478-11	ELECT	100MF	20%	25V
C483	1-124-120-11	ELECT	220MF	20%	25V
C484	1-101-004-00	CERAMIC	0.01MF		50V
C485	1-124-478-11	ELECT	100MF	20%	25V
C486	1-101-004-00	CERAMIC	0.01MF		50V
C487	1-101-004-00	CERAMIC	0.01MF		50V
C488	1-124-120-11	ELECT	220MF	20%	25V
C489	1-124-927-11	ELECT	4.7MF	20%	50V
C491	1-101-004-00	CERAMIC	0.01MF		50V
C492	1-124-120-11	ELECT	220MF	20%	25V
C493	1-101-004-00	CERAMIC	0.01MF		50V
C494	1-124-120-11	ELECT	220MF	20%	25V
C495	1-101-880-00	CERAMIC	47PF	5%	50V
C496	1-124-478-11	ELECT	100MF	20%	25V
C497	1-124-120-11	ELECT	220MF	20%	25V
C498	1-124-925-11	ELECT	2.2MF	20%	50V
C500	1-101-884-00	CERAMIC	56PF	5%	50V
C501	1-124-120-11	ELECT	220MF	20%	25V
C502	1-124-927-11	ELECT	4.7MF	20%	50V
C503	1-124-927-11	ELECT	4.7MF	20%	50V
C504	1-102-114-00	CERAMIC	470PF	10%	50V
C505	1-123-875-11	ELECT	10MF	20%	50V
C506	1-136-298-00	FILM	0.0033MF	5%	100V
C507	1-106-351-00	MYLAR	0.0022MF	5%	100V
C508	1-108-626-11	MYLAR	0.01MF	10%	100V
C509	1-106-375-12	MYLAR	0.022MF	10%	100V
C510	1-108-626-11	MYLAR	0.01MF	10%	100V
C511	1-124-902-00	ELECT	0.47MF	20%	50V
C512	1-102-030-00	CERAMIC	330PF	10%	500V
C513	1-129-720-00	FILM	0.033MF	5%	630V
C514 ⚠.	1-136-078-11	FILM	0.0098MF	3%	2KV
C515 ⚠.	1-162-116-51	CERAMIC	680PF	10%	2KV
C516 ⚠.	1-162-116-51	CERAMIC	680PF	10%	2KV
C517	1-108-692-11	MYLAR	0.01MF	10%	200V
C518	1-126-104-11	ELECT	470MF	20%	35V

REF.NO.	PART NO.	DESCRIPTION			REMARK
C519	1-124-120-11	ELECT	220MF	20%	25V
C520	1-124-494-00	ELECT	33MF		160V
C521	1-102-212-00	CERAMIC	820PF	10%	500V
C522	1-102-212-00	CERAMIC	820PF	10%	500V
C523	1-162-114-00	CERAMIC	0.0047MF		2KV
C524	1-108-700-11	MYLAR	0.047MF	10%	200V
C525	1-108-634-11	MYLAR	0.047MF	10%	100V
C526	1-124-477-11	ELECT	47MF	20%	25V
C527	1-124-902-00	ELECT	0.47MF	20%	50V
C528	1-124-902-00	ELECT	0.47MF	20%	50V
C529	1-126-233-11	ELECT	22MF	20%	50V
C530	1-123-875-11	ELECT	10MF	20%	50V
C531	1-131-351-00	TANTALUM	4.7MF	10%	35V
C532	1-123-948-00	ELECT	22MF	20%	250V
C533	1-136-111-00	FILM	1MF	5%	200V
C534	1-106-399-00	MYLAR	0.22MF	10%	200V
C535	1-123-946-00	ELECT	4.7MF	20%	250V
C536	1-136-111-00	FILM	1MF	5%	200V
C537	1-102-002-00	CERAMIC	680PF	10%	500V
C538	1-108-626-11	MYLAR	0.01MF	10%	100V
C539	1-108-626-11	MYLAR	0.01MF	10%	100V
C540	1-106-347-00	MYLAR	0.0015MF	10%	100V
C541	1-124-045-00	ELECT	4.7MF	20%	50V
C542	1-123-875-11	ELECT	10MF	20%	50V
C543	1-124-927-11	ELECT	4.7MF	20%	50V
C544	1-124-190-00	ELECT	680MF	10%	25V
C545	1-106-371-00	MYLAR	0.015MF	10%	200V
C546	1-102-030-00	CERAMIC	330PF	10%	500V
C547	1-124-342-00	ELECT	3.3MF	20%	160V
C548	1-102-030-00	CERAMIC	330PF	10%	500V
C549	1-123-875-11	ELECT	10MF	20%	50V
C550	1-102-244-00	CERAMIC	220PF	10%	500V
C551	1-124-360-00	ELECT	1000MF	20%	16V
C552	1-124-499-11	ELECT	1MF	20%	50V
C553	1-108-626-11	MYLAR	0.01MF	10%	100V
C554	1-124-499-11	ELECT	1MF	20%	50V
C555	1-108-633-11	MYLAR	0.039MF	10%	100V
C556	1-136-173-00	FILM	0.47MF	5%	50V
C557	1-124-902-00	ELECT	0.47MF	20%	50V
C558	1-131-356-00	TANTALUM	3.3MF	10%	25V
C559	1-123-875-11	ELECT	10MF	20%	50V
C560	1-136-161-00	FILM	0.047MF	5%	50V
C561	1-102-973-00	CERAMIC	100PF	5%	50V
C562	1-130-471-00	FILM	0.001MF	5%	50V
C563	1-123-875-11	ELECT	10MF	20%	50V
C564	1-102-978-00	CERAMIC	220PF	5%	50V
C565	1-124-478-11	ELECT	100MF	20%	25V
C566	1-124-499-11	ELECT	1MF	20%	50V
C567	1-123-875-11	ELECT	10MF	20%	50V
C568	1-108-614-11	MYLAR	0.001MF	10%	100V
C569	1-130-736-11	FILM	0.01MF	5%	50V
C570	1-123-875-11	ELECT	10MF	20%	50V
C571	1-126-233-11	ELECT	22MF	20%	25V
C572	1-124-499-11	ELECT	1MF	20%	50V
C573	1-123-875-11	ELECT	10MF	20%	50V
C574	1-124-478-11	ELECT	100MF	20%	25V
C575	1-102-978-00	CERAMIC	220PF	5%	50V
C576	1-161-021-11	CERAMIC	0.047MF	10%	25V
C577	1-123-875-11	ELECT	10MF	20%	50V
C578	1-124-477-11	ELECT	47MF	20%	25V
C579	1-124-477-11	ELECT	47MF	20%	25V
C580	1-124-499-11	ELECT	1MF	20%	50V
C581	1-124-478-11	ELECT	100MF	20%	25V
C583	1-126-233-11	ELECT	22MF	20%	50V
C584	1-126-233-11	ELECT	22MF	20%	50V
C585	1-102-110-00	CERAMIC	220PF	10%	50V
C590	1-126-233-11	ELECT	22MF	20%	50V
C591	1-124-925-11	ELECT	2.2MF	20%	50V
C801	1-101-004-00	CERAMIC	0.01MF		50V
C802	1-101-361-00	CERAMIC	150PF	5%	50V
C803	1-102-976-00	CERAMIC	180PF	5%	50V
C804	1-126-233-11	ELECT	22MF	20%	50V
C805	1-102-125-00	CERAMIC	0.0047MF	10%	50V
C806	1-101-884-00	CERAMIC	56PF	5%	50V
C807	1-130-736-11	FILM	0.01MF	5%	50V
C808	1-124-120-11	ELECT	220MF	20%	25V
C809	1-101-004-00	CERAMIC	0.01MF		50V
C810	1-108-620-11	MYLAR	0.0033MF	10%	100V
C811	1-124-927-11	ELECT	4.7MF	20%	50V
C1001	1-124-478-11	ELECT	100MF	20%	25V
C1002	1-123-875-11	ELECT	10MF	20%	50V
C1003	1-102-125-00	CERAMIC	0.0047MF	10%	50V
C1004	1-124-464-11	ELECT	0.22MF	20%	50V
C1005	1-123-875-11	ELECT	10MF	20%	50V
C1006	1-123-875-11	ELECT	10MF	20%	50V
C1007	1-108-634-11	MYLAR	0.047MF	10%	100V
C1008	1-124-478-11	ELECT	100MF	20%	25V
C1009	1-124-480-11	ELECT	470MF	20%	25V
C1010	1-124-478-11	ELECT	100MF	20%	25V
C1011	1-124-477-11	ELECT	47MF	20%	25V
C1012	1-124-120-11	ELECT	220MF	20%	25V
C1013	1-124-478-11	ELECT	100MF	20%	25V
		<DIODE>			
D302	8-719-911-19	DIODE 1SS119			
D303	8-719-911-19	DIODE 1SS119			
D304	8-719-911-19	DIODE 1SS119			
D305	8-719-911-19	DIODE 1SS119			
D306	8-719-911-19	DIODE 1SS119			
D307	8-719-911-19	DIODE 1SS119			
D308	8-719-911-19	DIODE 1SS119			
D309	8-719-911-19	DIODE 1SS119			
D311	8-719-911-19	DIODE 1SS119			
D312	8-719-911-19	DIODE 1SS119			
D313	8-719-911-19	DIODE 1SS119			
D314	8-719-911-19	DIODE 1SS119			
D400	8-719-121-40	DIODE RD10ES-L3			
D401	8-719-911-19	DIODE 1SS119			
D402	8-719-120-27	DIODE RD4.3ES-L2			
D403	8-719-109-93	DIODE RD6.2ES-B2			
D404	8-719-911-19	DIODE 1SS119			
D405	8-719-911-19	DIODE 1SS119			
D501	8-719-911-19	DIODE 1SS119			
D502	8-719-971-20	DIODE ERC38-06			
D503	8-719-971-20	DIODE ERC38-06			
D504	8-719-901-58	DIODE RGP15J			
D505	8-719-901-58	DIODE RGP15J			
D506	8-719-901-19	DIODE V11N			
D507	8-719-945-80	DIODE ERC06-15S			
D508	8-719-928-08	DIODE ERD28-08S			
D509	8-719-100-35	DIODE RD5.6E-B2			
D510	8-719-190-00	DIODE RD24E-BZ7			
D511	8-719-200-02	DIODE 10E2			
D512	8-719-200-02	DIODE 10E2			
D513	8-719-911-19	DIODE 1SS119			
D514	8-719-300-76	DIODE RH-1Z			

The components identified by shading and mark ⚠ are critical for safety.
Replace only with part number specified.

A

REF.NO.	PART NO.	DESCRIPTION	REMARK
D515	8-719-300-76	DIODE RH-1Z	
D516	8-719-200-02	DIODE 10E2	
D517	8-719-911-19	DIODE 1SS119	
D518	8-719-200-02	DIODE 10E2	
D519	8-719-911-19	DIODE 1SS119	
D520	8-719-911-19	DIODE 1SS119	
D521	8-719-911-19	DIODE 1SS119	
D522	8-719-911-19	DIODE 1SS119	
D523	8-719-911-19	DIODE 1SS119	
D524	8-719-911-19	DIODE 1SS119	
D526	8-719-911-19	DIODE 1SS119	
D527	8-719-911-19	DIODE 1SS119	
D528	8-719-911-19	DIODE 1SS119	
D529	8-719-911-19	DIODE 1SS119	
D530	8-719-901-83	DIODE 1SS83	
D531	8-719-911-19	DIODE 1SS119	
D801	8-719-911-19	DIODE 1SS119	
D802	8-719-911-19	DIODE 1SS119	
D1001	8-719-911-19	DIODE 1SS119	
D1002	8-719-911-19	DIODE 1SS119	
D1003	8-719-911-19	DIODE 1SS119	
D1010	8-719-120-64	DIODE RD5.6ES-L1	
D1011	8-719-110-08	DIODE RD8.2ES-B2	
D1012	8-719-911-55	DIODE U05G	
D1013	8-719-110-37	DIODE RD13ES-B3	
D1014	8-719-936-56	DIODE DAN209S	

<DELAY LINE>

REF.NO.	PART NO.	DESCRIPTION	REMARK
DL301	1-415-633-11	DELAY LINE, Y	

<IC>

REF.NO.	PART NO.	DESCRIPTION	REMARK
IC301	8-759-204-21	IC TA7193P	
IC302	1-808-627-11	ACC BLOCK ACC-1	
IC303	8-759-710-31	IC NJM2243S	
IC304	1-235-534-11	CONTROL MODULE, PICTURE	
IC305	8-749-920-72	IC BX-7573	
IC306	8-759-420-08	IC AN5613	
IC307	1-808-629-11	MODULE, BLUE ONLY BOM-1	
IC308	1-808-626-11	MODULE, GAIN/BIAS GBM-1	
IC309	8-759-240-52	IC TC4052BP	
IC311	8-759-800-81	IC LA7016	
IC312	8-759-800-81	IC LA7016	
IC401	8-752-030-31	IC CXA1024S	
IC501	8-759-100-60	IC UPC1377C	
IC502	8-759-145-58	IC UPC4558C	
IC503	8-749-920-74	IC BX7574	
IC504	8-759-345-38	IC HD14538BP	
IC505	8-759-700-06	IC NJM7812B	
IC1001	8-759-420-04	IC AN5265	

<COIL>

REF.NO.	PART NO.	DESCRIPTION	REMARK
L300	1-410-470-11	INDUCTOR 10UH	
L301	1-410-470-11	INDUCTOR 10UH	
L302	1-410-470-11	INDUCTOR 10UH	
L303	1-410-471-11	INDUCTOR 12UH	
L304	1-408-406-00	INDUCTOR 5.6UH	
L306	1-410-470-11	INDUCTOR 10UH	
L307	1-408-406-00	INDUCTOR 5.6UH	
L495	1-421-013-00	COIL, (HOLIZONTAL CHOKE) 25UH	
L501	1-459-155-00	COIL (WITH CORE) 45UH	
L502	1-410-671-31	INDUCTOR 47UH	
L503	1-410-666-31	INDUCTOR 18UH	
L504	1-407-365-00	COIL, CHOKE	
L505	1-407-365-00	COIL, CHOKE	
L506	1-408-238-00	INDUCTOR 3.9MMH	
L507	1-459-155-00	COIL (WITH CORE) 45UH	
L508 ⚠	1-459-496-12	COIL, FERRITE (HLC)	
L509	1-459-106-00	COIL, DUST CORE	
L510	1-459-075-00	COIL, DYNAMIC CONVERSION CHOKE	
L511	1-459-059-00	COIL, DUST CORE	
L512	1-408-247-00	INDUCTOR 33MMH	
L513	1-459-104-00	COIL, DUST CORE	
L514	1-410-686-11	INDUCTOR 1MMH	
L515	1-410-510-11	INDUCTOR 12UH	
L801	1-410-470-11	INDUCTOR 10UH	
L802	1-410-089-21	INDUCTOR 15MMH	

<NEON LAMP>

REF.NO.	PART NO.	DESCRIPTION	REMARK
NL501	1-519-108-XX	LAMP, NEON	

<TRANSISTOR>

REF.NO.	PART NO.	DESCRIPTION	REMARK
Q300	8-729-119-76	TRANSISTOR 2SA1175-HFE	
Q301	8-729-119-78	TRANSISTOR 2SC2785-HFE	
Q302	8-729-119-78	TRANSISTOR 2SC2785-HFE	
Q303	8-729-119-78	TRANSISTOR 2SC2785-HFE	
Q304	8-729-119-78	TRANSISTOR 2SC2785-HFE	
Q305	8-729-119-78	TRANSISTOR 2SC2785-HFE	
Q306	8-729-119-78	TRANSISTOR 2SC2785-HFE	
Q307	8-729-119-76	TRANSISTOR 2SA1175-HFE	
Q308	8-729-119-78	TRANSISTOR 2SC2785-HFE	
Q309	8-729-119-78	TRANSISTOR 2SC2785-HFE	
Q310	8-729-119-78	TRANSISTOR 2SC2785-HFE	
Q311	8-729-900-89	TRANSISTOR DTC144ES	
Q312	8-729-119-78	TRANSISTOR 2SC2785-HFE	
Q313	8-729-119-78	TRANSISTOR 2SC2785-HFE	
Q314	8-729-900-65	TRANSISTOR DTA144ES	
Q315	8-729-900-89	TRANSISTOR DTC144ES	
Q316	8-729-900-89	TRANSISTOR DTC144ES	
Q317	8-729-900-89	TRANSISTOR DTC144ES	
Q318	8-729-119-78	TRANSISTOR 2SC2785-HFE	
Q319	8-729-119-78	TRANSISTOR 2SC2785-HFE	
Q320	8-729-119-76	TRANSISTOR 2SA1175-HFE	
Q321	8-729-119-76	TRANSISTOR 2SA1175-HFE	
Q322	8-729-900-89	TRANSISTOR DTC144ES	
Q323	8-729-900-89	TRANSISTOR DTC144ES	
Q324	8-729-119-76	TRANSISTOR 2SA1175-HFE	
Q325	8-729-119-78	TRANSISTOR 2SC2785-HFE	
Q326	8-729-119-78	TRANSISTOR 2SC2785-HFE	
Q327	8-729-119-78	TRANSISTOR 2SC2785-HFE	
Q328	8-729-119-76	TRANSISTOR 2SA1175-HFE	
Q329	8-729-119-78	TRANSISTOR 2SC2785-HFE	
Q330	8-729-119-78	TRANSISTOR 2SC2785-HFE	
Q331	8-729-119-76	TRANSISTOR 2SA1175-HFE	
Q332	8-729-119-78	TRANSISTOR 2SC2785-HFE	
Q333	8-729-119-78	TRANSISTOR 2SC2785-HFE	
Q334	8-729-119-76	TRANSISTOR 2SA1175-HFE	
Q335	8-729-119-76	TRANSISTOR 2SA1175-HFE	
Q336	8-729-119-76	TRANSISTOR 2SA1175-HFE	
Q337	8-729-119-78	TRANSISTOR 2SC2785-HFE	
Q338	8-729-900-89	TRANSISTOR DTC144ES	
Q400	8-729-177-33	TRANSISTOR 2SD773-4	
Q401	8-729-900-36	TRANSISTOR DTC124ES	

REF.NO.	PART NO.	DESCRIPTION	REMARK
Q402	8-729-900-36	TRANSISTOR DTC124ES	
Q403	8-729-119-76	TRANSISTOR 2SA1175-HFE	
Q404	8-729-119-78	TRANSISTOR 2SC2785-HFE	
Q405	8-729-119-78	TRANSISTOR 2SC2785-HFE	
Q406	8-729-119-78	TRANSISTOR 2SC2785-HFE	
Q407	8-729-119-78	TRANSISTOR 2SC2785-HFE	
Q408	8-729-119-78	TRANSISTOR 2SC2785-HFE	
Q409	8-729-119-78	TRANSISTOR 2SC2785-HFE	
Q410	8-729-900-89	TRANSISTOR DTC144ES	
Q411	8-729-900-89	TRANSISTOR DTC144ES	
Q412	8-729-119-76	TRANSISTOR 2SA1175-HFE	
Q413	8-729-119-78	TRANSISTOR 2SC2785-HFE	
Q414	8-729-119-78	TRANSISTOR 2SC2785-HFE	
Q415	8-729-900-36	TRANSISTOR DTC124ES	
Q416	8-729-900-36	TRANSISTOR DTC124ES	
Q501	8-729-800-35	TRANSISTOR 2SD1397-CA	
Q502	8-729-119-80	TRANSISTOR 2SC2688-K	
Q503	8-729-119-78	TRANSISTOR 2SC2785-HFE	
Q504	8-729-119-76	TRANSISTOR 2SA1175-HFE	
Q505	8-729-309-08	TRANSISTOR 2SC1890A	
Q506	8-729-119-78	TRANSISTOR 2SC2785-HFE	
Q507	8-729-313-42	TRANSISTOR 2SD1134-C	
Q508	8-729-119-78	TRANSISTOR 2SC2785-HFE	
Q509	8-729-195-82	TRANSISTOR 2SC2958-L	
Q510	8-729-122-03	TRANSISTOR 2SA1220A-Q	
Q511	8-729-169-02	TRANSISTOR 2SC2690A-Q	
Q512	8-729-119-76	TRANSISTOR 2SA1175-HFE	
Q513	8-729-900-63	TRANSISTOR DTA124ES	
Q514	8-729-900-36	TRANSISTOR DTC124ES	
Q515	8-729-900-36	TRANSISTOR DTC124ES	
Q516	8-729-119-76	TRANSISTOR 2SA1175-HFE	
Q517	8-729-119-78	TRANSISTOR 2SC2785-HFE	
Q518	8-729-119-78	TRANSISTOR 2SC2785-HFE	
Q519	8-729-900-36	TRANSISTOR DTC124ES	
Q520	8-729-900-63	TRANSISTOR DTA124ES	
Q521	8-729-119-78	TRANSISTOR 2SC2785-HFE	
Q522	8-729-119-78	TRANSISTOR 2SC2785-HFE	
Q523	8-729-900-36	TRANSISTOR DTC124ES	
Q524	8-729-900-63	TRANSISTOR DTA124ES	
Q525	8-729-900-36	TRANSISTOR DTC124ES	
Q526	8-729-119-76	TRANSISTOR 2SA1175-HFE	
Q528	8-729-119-78	TRANSISTOR 2SC2785-HFE	
Q529	8-729-119-78	TRANSISTOR 2SC2785-HFE	
Q530	8-729-119-78	TRANSISTOR 2SC2785-HFE	
Q531	8-729-119-78	TRANSISTOR 2SC2785-HFE	
Q532	8-729-119-76	TRANSISTOR 2SA1175-HFE	
Q533	8-729-119-76	TRANSISTOR 2SA1175-HFE	
Q534	8-729-119-76	TRANSISTOR 2SA1175-HFE	
Q550	8-729-119-78	TRANSISTOR 2SC2785-HFE	
Q551	8-729-119-78	TRANSISTOR 2SC2785-HFE	
Q801	8-729-119-78	TRANSISTOR 2SC2785-HFE	
Q802	8-729-119-76	TRANSISTOR 2SA1175-HFE	
Q803	8-729-119-78	TRANSISTOR 2SC2785-HFE	
Q804	8-729-119-78	TRANSISTOR 2SC2785-HFE	
Q805	8-729-119-76	TRANSISTOR 2SA1175-HFE	
Q806	8-729-900-36	TRANSISTOR DTC124ES	
Q807	8-729-119-78	TRANSISTOR 2SC2785-HFE	
Q1001	8-729-119-76	TRANSISTOR 2SA1175-HFE	
Q1002	8-729-119-76	TRANSISTOR 2SA1175-HFE	
Q1003	8-729-177-42	TRANSISTOR 2SD774-3	
Q1004	8-729-177-42	TRANSISTOR 2SD774-3	
Q1005	8-729-122-03	TRANSISTOR 2SA1220A-P	
Q1006	8-729-119-78	TRANSISTOR 2SC2785-HFE	

<RESISTOR>

REF.NO.	PART NO.	DESCRIPTION				REMARK
R300	1-249-405-11	CARBON	100	5%	1/4W	
R301	1-249-405-11	CARBON	100	5%	1/4W	
R302	1-247-721-11	CARBON	4.7K	5%	1/4W	
R303	1-249-426-11	CARBON	5.6K	5%	1/4W	
R304	1-249-421-11	CARBON	2.2K	5%	1/4W	
R305	1-249-429-11	CARBON	10K	5%	1/4W	
R306	1-249-405-11	CARBON	100	5%	1/4W	
R307	1-247-887-00	CARBON	220K	5%	1/4W	
R308	1-249-429-11	CARBON	10K	5%	1/4W	
R309	1-249-405-11	CARBON	100	5%	1/4W	
R310	1-247-887-00	CARBON	220K	5%	1/4W	
R311	1-249-435-11	CARBON	33K	5%	1/4W	
R312	1-249-431-11	CARBON	15K	5%	1/4W	
R313	1-249-405-11	CARBON	100	5%	1/4W	
R314	1-249-405-11	CARBON	100	5%	1/4W	
R315	1-249-413-11	CARBON	470	5%	1/4W	
R316	1-249-413-11	CARBON	470	5%	1/4W	
R317	1-249-414-11	CARBON	560	5%	1/4W	
R318	1-249-422-11	CARBON	2.7K	5%	1/4W	
R319	1-249-416-11	CARBON	820	5%	1/4W	
R320	1-249-415-11	CARBON	680	5%	1/4W	
R321	1-249-411-11	CARBON	330	5%	1/4W	
R322	1-249-409-11	CARBON	220	5%	1/4W	
R323	1-249-409-11	CARBON	220	5%	1/4W	
R324	1-249-417-11	CARBON	1K	5%	1/4W	
R325	1-249-405-11	CARBON	100	5%	1/4W	
R326	1-249-409-11	CARBON	220	5%	1/4W	
R327	1-249-417-11	CARBON	1K	5%	1/4W	
R328	1-249-434-11	CARBON	27K	5%	1/4W	
R329	1-249-433-11	CARBON	22K	5%	1/4W	
R330	1-249-433-11	CARBON	22K	5%	1/4W	
R331	1-249-433-11	CARBON	22K	5%	1/4W	
R332	1-249-405-11	CARBON	100	5%	1/4W	
R333	1-249-435-11	CARBON	33K	5%	1/4W	
R334	1-249-432-11	CARBON	18K	5%	1/4W	
R335	1-247-700-11	CARBON	100	5%	1/4W	
R336	1-249-417-11	CARBON	1K	5%	1/4W	
R337	1-249-410-11	CARBON	270	5%	1/4W	
R338	1-249-421-11	CARBON	2.2K	5%	1/4W	
R339	1-249-405-11	CARBON	100	5%	1/4W	
R340	1-249-434-11	CARBON	27K	5%	1/4W	
R341	1-249-434-11	CARBON	27K	5%	1/4W	
R342	1-249-418-11	CARBON	1.2K	5%	1/4W	
R343	1-249-440-11	CARBON	82K	5%	1/4W	
R344	1-249-428-11	CARBON	8.2K	5%	1/4W	
R345	1-249-416-11	CARBON	820	5%	1/4W	
R346	1-249-416-11	CARBON	820	5%	1/4W	
R347	1-249-421-11	CARBON	2.2K	5%	1/4W	
R348	1-249-421-11	CARBON	2.2K	5%	1/4W	
R349	1-249-417-11	CARBON	1K	5%	1/4W	
R350	1-249-425-11	CARBON	4.7K	5%	1/4W	
R351	1-249-421-11	CARBON	2.2K	5%	1/4W	
R352	1-247-891-00	CARBON	330K	5%	1/4W	
R353	1-249-428-11	CARBON	8.2K	5%	1/4W	
R354	1-249-424-11	CARBON	3.9K	5%	1/4W	
R355	1-249-434-11	CARBON	27K	5%	1/4W	
R356	1-249-437-11	CARBON	47K	5%	1/4W	
R357	1-249-437-11	CARBON	47K	5%	1/4W	
R358	1-249-433-11	CARBON	22K	5%	1/4W	
R359	1-249-417-11	CARBON	1K	5%	1/4W	
R360	1-249-413-11	CARBON	470	5%	1/4W	

A

REF.NO.	PART NO.	DESCRIPTION				REMARK
R361	1-249-405-11	CARBON	100	5%	1/4W	
R362	1-249-410-11	CARBON	270	5%	1/4W	
R363	1-249-432-11	CARBON	18K	5%	1/4W	
R364	1-249-417-11	CARBON	1K	5%	1/4W	
R365	1-249-432-11	CARBON	18K	5%	1/4W	
R366	1-249-437-11	CARBON	47K	5%	1/4W	
R367	1-249-413-11	CARBON	470	5%	1/4W	
R368	1-249-405-11	CARBON	100	5%	1/4W	
R369	1-249-405-11	CARBON	100	5%	1/4W	
R370	1-249-417-11	CARBON	1K	5%	1/4W	
R371	1-249-432-11	CARBON	18K	5%	1/4W	
R372	1-249-465-11	CARBON	47K	5%	1/4W	
R373	1-249-436-11	CARBON	39K	5%	1/4W	
R374	1-249-432-11	CARBON	18K	5%	1/4W	
R375	1-249-405-11	CARBON	100	5%	1/4W	
R376	1-249-417-11	CARBON	1K	5%	1/4W	
R377	1-249-428-11	CARBON	8.2K	5%	1/4W	
R378	1-249-433-11	CARBON	22K	5%	1/4W	
R379	1-249-430-11	CARBON	12K	5%	1/4W	
R380	1-249-405-11	CARBON	100	5%	1/4W	
R381	1-249-431-11	CARBON	15K	5%	1/4W	
R382	1-249-408-11	CARBON	180	5%	1/4W	
R383	1-249-413-11	CARBON	470	5%	1/4W	
R384	1-249-413-11	CARBON	470	5%	1/4W	
R385	1-249-411-11	CARBON	330	5%	1/4W	
R386	1-249-415-11	CARBON	680	5%	1/4W	
R387	1-249-405-11	CARBON	100	5%	1/4W	
R388	1-249-423-11	CARBON	3.3K	5%	1/4W	
R389	1-249-417-11	CARBON	1K	5%	1/4W	
R390	1-249-433-11	CARBON	22K	5%	1/4W	
R391	1-249-433-11	CARBON	22K	5%	1/4W	
R392	1-249-433-11	CARBON	22K	5%	1/4W	
R393	1-249-403-11	CARBON	68	5%	1/4W	
R394	1-249-409-11	CARBON	220	5%	1/4W	
R395	1-249-417-11	CARBON	1K	5%	1/4W	
R396	1-249-433-11	CARBON	22K	5%	1/4W	
R397	1-249-405-11	CARBON	100	5%	1/4W	
R398	1-249-405-11	CARBON	100	5%	1/4W	
R399	1-247-718-11	CARBON	2.7K	5%	1/4W	
R400	1-249-413-11	CARBON	470	5%	1/4W	
R401	1-249-413-11	CARBON	470	5%	1/4W	
R402	1-249-416-11	CARBON	820	5%	1/4W	
R403	1-249-411-11	CARBON	330	5%	1/4W	
R404	1-249-405-11	CARBON	100	5%	1/4W	
R405	1-249-422-11	CARBON	2.7K	5%	1/4W	
R406	1-249-413-11	CARBON	470	5%	1/4W	
R407	1-249-413-11	CARBON	470	5%	1/4W	
R408	1-249-416-11	CARBON	820	5%	1/4W	
R409	1-249-411-11	CARBON	330	5%	1/4W	
R410	1-249-405-11	CARBON	100	5%	1/4W	
R411	1-249-422-11	CARBON	2.7K	5%	1/4W	
R412	1-249-419-11	CARBON	1.5K	5%	1/4W	
R413	1-249-417-11	CARBON	1K	5%	1/4W	
R414	1-249-429-11	CARBON	10K	5%	1/4W	
R415	1-249-417-11	CARBON	1K	5%	1/4W	
R416	1-249-429-11	CARBON	10K	5%	1/4W	
R417	1-249-421-11	CARBON	2.2K	5%	1/4W	
R418	1-249-439-11	CARBON	68K	5%	1/4W	
R419	1-249-433-11	CARBON	22K	5%	1/4W	
R420	1-249-426-11	CARBON	5.6K	5%	1/4W	
R421	1-249-437-11	CARBON	47K	5%	1/4W	
R422	1-249-437-11	CARBON	47K	5%	1/4W	
R423	1-249-405-11	CARBON	100	5%	1/4W	
R424	1-249-437-11	CARBON	47K	5%	1/4W	

REF.NO.	PART NO.	DESCRIPTION				REMARK
R425	1-249-437-11	CARBON	47K	5%	1/4W	
R426	1-249-434-11	CARBON	27K	5%	1/4W	
R427	1-249-429-11	CARBON	10K	5%	1/4W	
R428	1-249-425-11	CARBON	4.7K	5%	1/4W	
R429	1-249-405-11	CARBON	100	5%	1/4W	
R430	1-247-711-11	CARBON	680	5%	1/4W	
R431	1-249-416-11	CARBON	820	5%	1/4W	
R432	1-249-414-11	CARBON	560	5%	1/4W	
R433	1-249-433-11	CARBON	22K	5%	1/4W	
R434	1-249-425-11	CARBON	4.7K	5%	1/4W	
R435	1-249-405-11	CARBON	100	5%	1/4W	
R436	1-249-423-11	CARBON	3.3K	5%	1/4W	
R437	1-249-411-11	CARBON	330	5%	1/4W	
R438	1-249-405-11	CARBON	100	5%	1/4W	
R439	1-249-417-11	CARBON	1K	5%	1/4W	
R440	1-249-425-11	CARBON	4.7K	5%	1/4W	
R441	1-249-421-11	CARBON	2.2K	5%	1/4W	
R442	1-247-700-11	CARBON	100	5%	1/4W	
R443	1-249-421-11	CARBON	2.2K	5%	1/4W	
R444	1-249-419-11	CARBON	1.5K	5%	1/4W	
R445	1-249-417-11	CARBON	1K	5%	1/4W	
R446	1-249-422-11	CARBON	2.7K	5%	1/4W	
R447	1-249-429-11	CARBON	10K	5%	1/4W	
R448	1-247-883-00	CARBON	150K	5%	1/4W	
R449	1-249-462-11	CARBON	22K	5%	1/4W	
R450	1-249-409-11	CARBON	220	5%	1/4W	
R451	1-247-704-11	CARBON	220	5%	1/4W	
R452	1-249-409-11	CARBON	220	5%	1/4W	
R453	1-247-704-11	CARBON	220	5%	1/4W	
R454	1-249-417-11	CARBON	1K	5%	1/4W	
R455	1-249-409-11	CARBON	220	5%	1/4W	
R456	1-249-409-11	CARBON	220	5%	1/4W	
R457	1-249-409-11	CARBON	220	5%	1/4W	
R458	1-249-433-11	CARBON	22K	5%	1/4W	
R459	1-249-425-11	CARBON	4.7K	5%	1/4W	
R460	1-249-425-11	CARBON	4.7K	5%	1/4W	
R461	1-249-433-11	CARBON	22K	5%	1/4W	
R462	1-249-386-11	CARBON	2.7	5%	1/4W	F
R464	1-259-881-11	CARBON	2.7M	5%	1/4W	
R465	1-249-465-11	CARBON	47K	5%	1/4W	
R466	1-249-421-11	CARBON	2.2K	5%	1/4W	
R467	1-249-431-11	CARBON	15K	5%	1/4W	
R468	1-249-431-11	CARBON	15K	5%	1/4W	
R469	1-247-897-11	CARBON	560K	5%	1/4W	
R470	1-249-437-11	CARBON	47K	5%	1/4W	
R471	1-249-429-11	CARBON	10K	5%	1/4W	
R472	1-249-417-11	CARBON	1K	5%	1/4W	

- ※ : Selected to yield optimum performance.

REF.NO.	PART NO.	DESCRIPTION				REMARK
R473	1-249-437-11	CARBON	47K	5%	1/4W	
R474	1-249-429-11	CARBON	10K	5%	1/4W	
R475	1-249-417-11	CARBON	1K	5%	1/4W	
R476	1-249-401-11	CARBON	47	5%	1/4W	
R477	1-249-417-11	CARBON	1K	5%	1/4W	
R478	1-249-401-11	CARBON	47	5%	1/4W	
R479	1-249-417-11	CARBON	1K	5%	1/4W	
R480	1-249-401-11	CARBON	47	5%	1/4W	
R481	1-249-433-11	CARBON	22K	5%	1/4W	
R482	1-249-433-11	CARBON	22K	5%	1/4W	
R483	1-249-433-11	CARBON	22K	5%	1/4W	
R484	1-247-891-00	CARBON	330K	5%	1/4W	
R485	1-247-891-00	CARBON	330K	5%	1/4W	
R486	1-249-433-11	CARBON	22K	5%	1/4W	
R487	1-249-433-11	CARBON	22K	5%	1/4W	
R488	1-249-418-11	CARBON	1.2K	5%	1/4W	F
R489	1-249-421-11	CARBON	2.2K	5%	1/4W	
R490	1-247-895-00	CARBON	470K	5%	1/4W	
R491	1-249-420-11	CARBON	1.8K	5%	1/4W	
R492	1-249-417-11	CARBON	1K	5%	1/4W	
R493	1-249-441-11	CARBON	100K	5%	1/4W	
R494	1-249-413-11	CARBON	470	5%	1/4W	
R495	1-249-433-11	CARBON	22K	5%	1/4W	
R496	1-249-433-11	CARBON	22K	5%	1/4W	
R497	1-249-437-11	CARBON	47K	5%	1/4W	
R498	1-249-433-11	CARBON	22K	5%	1/4W	
R499	1-249-433-11	CARBON	22K	5%	1/4W	
※R500	1-215-451-00	METAL	18K	1%	1/6W	
※R500	1-215-452-00	METAL	20K	1%	1/6W	
※R500	1-215-453-00	METAL	22K	1%	1/6W	
※R500	1-215-454-00	METAL	24K	1%	1/6W	
※R500	1-215-455-00	METAL	27K	1%	1/6W	
※R500	1-215-456-00	METAL	30K	1%	1/6W	
※R500	1-215-457-00	METAL	33K	1%	1/6W	
※R500	1-215-458-00	METAL	36K	1%	1/6W	
※R500	1-215-459-00	METAL	39K	1%	1/6W	
※R500	1-215-460-00	METAL	43K	1%	1/6W	
※R500	1-215-461-00	METAL	47K	1%	1/6W	
※R500	1-215-462-00	METAL	51K	1%	1/6W	
※R500	1-215-463-00	METAL	56K	1%	1/6W	
※R500	1-215-464-00	METAL	62K	1%	1/6W	
※R500	1-215-465-00	METAL	68K	1%	1/6W	
※R500	1-215-466-00	METAL	75K	1%	1/6W	
※R500	1-215-467-00	METAL	82K	1%	1/6W	
R501	1-247-711-11	CARBON	680	5%	1/4W	F
R502	1-216-464-11	METAL OXIDE	18K	5%	2W	F
R503	1-249-440-11	CARBON	82K	5%	1/4W	
R504	1-249-424-11	CARBON	3.9K	5%	1/4W	
R505	1-249-440-11	CARBON	82K	5%	1/4W	
R506	1-249-431-11	CARBON	15K	5%	1/4W	
R507	1-249-434-11	CARBON	27K	5%	1/4W	
R508	1-247-723-11	CARBON	6.8K	5%	1/4W	F
R509	1-249-423-11	CARBON	3.3K	5%	1/4W	F
R510	1-215-919-11	METAL OXIDE	2.2K	5%	3W	F
R511	1-215-447-00	METAL	12K	1%	1/6W	
R512	1-212-883-00	FUSIBLE	120	5%	1/4W	F
R513	1-249-383-11	CARBON	1.5	5%	1/4W	F
R514	1-216-367-11	METAL OXIDE	0.68	5%	2W	F
R515	1-216-434-11	METAL OXIDE	1.8K	5%	1W	F
R516	1-214-888-00	METAL	10K	1%	1/2W	
R517	1-214-763-00	METAL	27K	1%	1/4W	
R518	1-214-956-00	METAL	470K	1%	1/4W	
R519	1-214-917-00	METAL	150K	1%	1/2W	
R520	1-215-467-00	METAL	82K	1%	1/6W	

REF.NO.	PART NO.	DESCRIPTION				REMARK
R521	1-215-445-00	METAL	10K	1%	1/6W	
R522	1-247-887-00	CARBON	220K	5%	1/4W	
R523	1-215-439-00	METAL	5.6K	1%	1/6W	
R524	1-249-469-11	CARBON	100K	5%	1/4W	
R525	1-215-445-00	METAL	10K	1%	1/6W	
R526	1-215-442-00	METAL	7.5K	1%	1/6W	
R527	1-249-417-11	CARBON	1K	5%	1/4W	
R528	1-215-877-11	METAL OXIDE	22K	5%	1W	F
R529	1-216-360-11	METAL OXIDE	8.2	5%	1W	F
R530	1-216-427-00	METAL OXIDE	120	5%	1W	F
R531	1-247-756-11	CARBON	2.2K	5%	1/2W	F
R532	1-249-436-11	CARBON	39K	5%	1/4W	
R533	1-249-422-11	CARBON	2.7K	5%	1/4W	
R534	1-247-719-11	CARBON	3.3K	5%	1/4W	
R535	1-215-441-00	METAL	6.8K	1%	1/6W	
R536	1-249-433-11	CARBON	22K	5%	1/4W	
R537	1-249-417-11	CARBON	1K	5%	1/4W	F
R538	1-249-428-11	CARBON	8.2K	5%	1/4W	
R539	1-247-883-00	CARBON	150K	5%	1/4W	
R540	1-249-466-11	CARBON	56K	5%	1/4W	
R541	1-247-883-00	CARBON	150K	5%	1/4W	
R542	1-249-438-11	CARBON	56K	5%	1/4W	
R543	1-247-903-00	CARBON	1M	5%	1/4W	
R544	1-215-453-00	METAL	22K	1%	1/6W	
R545	1-249-417-11	CARBON	1K	5%	1/4W	
R546	1-249-411-11	CARBON	330	5%	1/4W	
R547	1-249-414-11	CARBON	560	5%	1/4W	
R548	1-249-415-11	CARBON	680	5%	1/4W	
R549	1-215-473-00	METAL	150K	1%	1/6W	
R550	1-249-433-11	CARBON	22K	5%	1/4W	
R551	1-247-688-11	CARBON	10	5%	1/4W	F
R552	1-249-425-11	CARBON	4.7K	5%	1/4W	
R553	1-249-429-11	CARBON	10K	5%	1/4W	
R554	1-249-460-11	CARBON	15K	5%	1/4W	
R555	1-249-426-11	CARBON	5.6K	5%	1/4W	
R556	1-247-707-11	CARBON	390	5%	1/4W	
R557	1-215-463-00	METAL	56K	1%	1/6W	
R558	1-215-457-00	METAL	33K	1%	1/6W	
R559	1-215-453-00	METAL	22K	1%	1/6W	
R560	1-215-479-00	METAL	270K	1%	1/6W	
R561	1-249-435-11	CARBON	33K	5%	1/4W	
R562	1-249-422-11	CARBON	2.7K	5%	1/4W	
R563	1-249-428-11	CARBON	8.2K	5%	1/4W	
R564	1-215-445-00	METAL	10K	1%	1/6W	
R565	1-249-413-11	CARBON	470	5%	1/4W	F
R566	1-216-350-11	METAL OXIDE	1.2	5%	1W	F
R567	1-216-350-11	METAL OXIDE	1.2	5%	1W	F
R568	1-249-401-11	CARBON	47	5%	1/4W	F
R569	1-215-869-11	METAL OXIDE	1K	5%	1W	F
R570	1-247-697-11	CARBON	56	5%	1/4W	F
R571	1-215-867-00	METAL OXIDE	470	5%	1W	F
R572	1-216-355-11	METAL OXIDE	3.3	5%	1W	F
R573	1-247-746-11	CARBON	390	5%	1/2W	
R574	1-249-425-11	CARBON	4.7K	5%	1/4W	
R575	1-247-688-11	CARBON	10	5%	1/4W	F
R576	1-249-440-11	CARBON	82K	5%	1/4W	
R577	1-249-396-11	CARBON	18	5%	1/4W	
R578	1-249-433-11	CARBON	22K	5%	1/4W	
R579	1-249-433-11	CARBON	22K	5%	1/4W	
R580	1-249-433-11	CARBON	22K	5%	1/4W	
R581	1-249-429-11	CARBON	10K	5%	1/4W	
R582	1-249-429-11	CARBON	10K	5%	1/4W	
R583	1-249-438-11	CARBON	56K	5%	1/4W	

A

REF.NO.	PART NO.	DESCRIPTION				REMARK
R584	1-247-881-00	CARBON	120K	5%	1/4W	
R585	1-249-433-11	CARBON	22K	5%	1/4W	
R586	1-215-449-00	METAL	15K	1%	1/6W	
R587	1-249-429-11	CARBON	10K	5%	1/4W	
R588	1-247-688-11	CARBON	10	5%	1/4W	F
R589	1-249-417-11	CARBON	1K	5%	1/4W	
R590	1-249-433-11	CARBON	22K	5%	1/4W	
R591	1-249-433-11	CARBON	22K	5%	1/4W	
R592	1-249-417-11	CARBON	1K	5%	1/4W	
R593	1-249-425-11	CARBON	4.7K	5%	1/4W	
R594	1-247-719-11	CARBON	3.3K	5%	1/4W	
R595	1-249-417-11	CARBON	1K	5%	1/4W	
R596	1-247-721-11	CARBON	4.7K	5%	1/4W	F
R597	1-215-437-00	METAL	4.7K	1%	1/6W	
R598	1-247-725-11	CARBON	10K	5%	1/4W	
R599	1-247-711-11	CARBON	680	5%	1/4W	F
R800	1-215-443-00	METAL	8.2K	1%	1/6W	
R801	1-249-440-11	CARBON	82K	5%	1/4W	
R802	1-215-429-00	METAL	2.2K	1%	1/6W	
R803	1-249-465-11	CARBON	47K	5%	1/4W	
R804	1-247-726-11	CARBON	33K	5%	1/4W	F
R805	1-249-407-11	CARBON	150	5%	1/4W	
R806	1-249-415-11	CARBON	680	5%	1/4W	
R807	1-249-437-11	CARBON	47K	5%	1/4W	
R808	1-249-433-11	CARBON	22K	5%	1/4W	
R809	1-215-471-00	METAL	120K	1%	1/6W	
R810	1-215-467-00	METAL	82K	1%	1/6W	
R811	1-249-429-11	CARBON	10K	5%	1/4W	
R812	1-249-427-11	CARBON	6.8K	5%	1/4W	
R813	1-249-405-11	CARBON	100	5%	1/4W	
R814	1-249-417-11	CARBON	1K	5%	1/4W	
R815	1-249-409-11	CARBON	220	5%	1/4W	
R816	1-249-429-11	CARBON	10K	5%	1/4W	
R817	1-247-881-00	CARBON	120K	5%	1/4W	
R818	1-247-881-00	CARBON	120K	5%	1/4W	
R819	1-247-903-00	CARBON	1M	5%	1/4W	
R820	1-249-426-11	CARBON	5.6K	5%	1/4W	
R821	1-247-881-00	CARBON	120K	5%	1/4W	
R822	1-249-417-11	CARBON	1K	5%	1/4W	
R823	1-247-696-11	CARBON	47	5%	1/4W	F
R824	1-249-439-11	CARBON	68K	5%	1/4W	
R825	1-249-437-11	CARBON	47K	5%	1/4W	
R826	1-249-417-11	CARBON	1K	5%	1/4W	
R827	1-249-417-11	CARBON	1K	5%	1/4W	
R828	1-249-417-11	CARBON	1K	5%	1/4W	
R829	1-249-421-11	CARBON	2.2K	5%	1/4W	
R830	1-249-435-11	CARBON	33K	5%	1/4W	
R831	1-249-438-11	CARBON	56K	5%	1/4W	
R832	1-249-417-11	CARBON	1K	5%	1/4W	
R833	1-249-425-11	CARBON	4.7K	5%	1/4W	
R834	1-249-425-11	CARBON	4.7K	5%	1/4W	
R835	1-247-889-00	CARBON	270K	5%	1/4W	
R836	1-247-897-11	CARBON	560K	5%	1/4W	
R837	1-215-469-00	METAL	100K	1%	1/6W	
R838	1-246-531-00	CARBON	270K	5%	1/4W	
R840	1-247-696-11	CARBON	47	5%	1/4W	
R842	1-249-409-11	CARBON	220	5%	1/4W	
R843	1-247-704-11	CARBON	220	5%	1/4W	
R844	1-249-417-11	CARBON	1K	5%	1/4W	
R845	1-247-725-11	CARBON	10K	5%	1/4W	
R846	1-215-439-00	METAL	5.6K	1%	1/6W	
R847	1-249-433-11	CARBON	22K	5%	1/4W	
R848	1-249-433-11	CARBON	22K	5%	1/4W	
R850	1-249-440-11	CARBON	82K	5%	1/4W	

REF.NO.	PART NO.	DESCRIPTION				REMARK
R851	1-249-439-11	CARBON	68K	5%	1/4W	
R852	1-249-437-11	CARBON	47K	5%	1/4W	
R853	1-247-710-11	CARBON	560	5%	1/4W	
R855	1-249-414-11	CARBON	560	5%	1/4W	
R856	1-249-429-11	CARBON	10K	5%	1/4W	
R857	1-247-725-11	CARBON	10K	5%	1/4W	
R858	1-249-433-11	CARBON	22K	5%	1/4W	
R860	1-249-425-11	CARBON	4.7K	5%	1/4W	
R861	1-249-437-11	CARBON	47K	5%	1/4W	
R862	1-249-425-11	CARBON	4.7K	5%	1/4W	
R863	1-247-721-11	CARBON	4.7K	5%	1/4W	
R864	1-247-717-11	CARBON	2.2K	5%	1/4W	
R866	1-249-426-11	CARBON	5.6K	5%	1/4W	
R867	1-249-426-11	CARBON	5.6K	5%	1/4W	
R868	1-249-421-11	CARBON	2.2K	5%	1/4W	
R869	1-249-425-11	CARBON	4.7K	5%	1/4W	
R870	1-249-426-11	CARBON	5.6K	5%	1/4W	
R871	1-249-427-11	CARBON	6.8K	5%	1/4W	
R872	1-249-417-11	CARBON	1K	5%	1/4W	
R873	1-249-437-11	CARBON	47K	5%	1/4W	
R874	1-215-437-00	METAL	4.7K	1%	1/6W	
R875	1-215-453-00	METAL	22K	1%	1/6W	
R876	1-249-429-11	CARBON	10K	5%	1/4W	
R877	1-249-417-11	CARBON	1K	5%	1/4W	
R878	1-249-429-11	CARBON	10K	5%	1/4W	
R879	1-249-437-11	CARBON	47K	5%	1/4W	
R880	1-249-417-11	CARBON	1K	5%	1/4W	
R881	1-249-423-11	CARBON	3.3K	5%	1/4W	
R883	1-249-409-11	CARBON	220	5%	1/4W	
R884	1-249-417-11	CARBON	1K	5%	1/4W	
R885	1-249-469-11	CARBON	100K	5%	1/4W	
R886	1-247-725-11	CARBON	10K	5%	1/4W	
R887	1-247-704-11	CARBON	220	5%	1/4W	
R1001	1-247-717-11	CARBON	2.2K	5%	1/4W	
R1002	1-249-429-11	CARBON	10K	5%	1/4W	
R1003	1-249-405-11	CARBON	100	5%	1/4W	
R1004	1-247-725-11	CARBON	10K	5%	1/4W	
R1005	1-249-437-11	CARBON	47K	5%	1/4W	
R1006	1-249-439-11	CARBON	68K	5%	1/4W	
R1007	1-249-433-11	CARBON	22K	5%	1/4W	
R1009	1-249-429-11	CARBON	10K	5%	1/4W	
R1010	1-249-415-11	CARBON	680	5%	1/4W	
R1011	1-249-455-11	CARBON	4.7	5%	1/4W	
R1012	1-216-355-11	METAL OXIDE	3.3	5%	1W	F
R1013	1-249-413-11	CARBON	470	5%	1/4W	
R1014	1-249-414-11	CARBON	560	5%	1/4W	
R1015	1-215-867-00	METAL OXIDE	470	5%	1W	F
R1016	1-247-698-11	CARBON	68	5%	1/4W	
R1017	1-249-421-11	CARBON	2.2K	5%	1/4W	
R1018	1-249-437-11	CARBON	47K	5%	1/4W	
R1019	1-212-857-00	FUSIBLE	10	5%	1/4W	F
R1020	1-249-429-11	CARBON	10K	5%	1/4W	
R1021	1-249-434-11	CARBON	27K	5%	1/4W	
R1022	1-249-428-11	CARBON	8.2K	5%	1/4W	
R1023	1-249-428-11	CARBON	8.2K	5%	1/4W	
R1024	1-247-903-00	CARBON	1M	5%	1/4W	
R1025	1-249-429-11	CARBON	10K	5%	1/4W	
R1026	1-249-429-11	CARBON	10K	5%	1/4W	
R1027	1-215-454-00	METAL	24K	1%	1/6W	
R1301	1-249-429-11	CARBON	10K	5%	1/4W	
R1302	1-247-725-11	CARBON	10K	5%	1/4W	
R1303	1-249-429-11	CARBON	10K	5%	1/4W	
R1304	1-249-405-11	CARBON	100	5%	1/4W	

The components identified by shading and mark ⚠ are critical for safety.
Replace only with part number specified.

REF.NO.	PART NO.	DESCRIPTION				REMARK
R1306	1-247-700-11	CARBON	100	5%	1/4W	
R1307	1-249-421-11	CARBON	2.2K	5%	1/4W	
		<VARIABLE RESISTOR>				
RV002	1-228-993-00	RES, ADJ, CARBON 4.7K				
RV003	1-228-993-00	RES, ADJ, CARBON 4.7K				
RV004	1-228-993-00	RES, ADJ, CARBON 4.7K				
RV005	1-228-996-00	RES, ADJ, CARBON 47K				
RV006	1-228-994-00	RES, ADJ, CARBON 10K				
RV007	1-228-994-00	RES, ADJ, CARBON 10K				
RV401	1-228-994-00	RES, ADJ, CARBON 10K				
RV501	1-228-993-00	RES, ADJ, METAL GLAZE 4.7K				
RV502	1-223-102-00	RES, ADJ, WIREWOUND 120				
RV503	1-228-996-00	RES, ADJ, METAL GLAZE 47K				
RV504	1-228-990-00	RES, ADJ, CARBON 1K				
RV505	1-228-995-00	RES, ADJ, CARBON 22K				
RV506	1-228-989-00	RES, ADJ, CARBON 470				
RV507	1-224-250-XX	RES, ADJ, METAL GLAZE 2.2K				
RV508	1-228-994-00	RES, ADJ, CARBON 10K				
RV509	1-228-998-00	RES, ADJ, CARBON 220K				
RV510	1-228-996-00	RES, ADJ, CARBON 47K				
RV511	1-228-989-00	RES, ADJ, CARBON 470				
RV512	1-228-995-00	RES, ADJ, CARBON 22K				
RV513	1-228-993-00	RES, ADJ, METAL GLAZE 4.7K				
RV514	1-228-996-00	RES, ADJ, CARBON 47K				
RV550	1-228-993-00	RES, ADJ, CARBON 4.7K				
		<TRANSFORMER>				
T501 ⚠	1-439-395-12	TRANSFORMER ASSY, FLYBACK				
T502	1-437-131-00	TRANSFORMER, DRIVE				
		<THERMISTOR>				
TH501	1-806-110-00	THERMISTOR				

****

REF.NO.	PART NO.	DESCRIPTION				REMARK
	*A-1330-986-A	C BOARD, COMPLETE ******************				
	⚠1-526-819-11	SOCKET, PICTURE TUBE				
	*4-374-912-01	COVER (MAIN), CV VOL				
	*4-374-913-01	COVER (REAR LID), CV VOL				
		<CONNECTOR>				
C1	*1-508-768-00	PIN, CONNECTOR (5MM PITCH) 6P				
C2	*1-506-371-00	PIN, CONNECTOR 2P				
C3	*1-564-513-11	PLUG, CONNECTOR 10P				
		<CAPACITOR>				
C701	1-102-115-00	CERAMIC	560PF	10%	50V	
C702	1-102-115-00	CERAMIC	560PF	10%	50V	
C703	1-102-115-00	CERAMIC	560PF	10%	50V	
C704	1-102-121-00	CERAMIC	0.0022MF	10%	50V	
C705	1-123-875-11	ELECT	10MF	20%	50V	
C706	1-102-074-00	CERAMIC	0.001MF	10%	50V	
C707	1-162-116-00	CERAMIC	680PF	10%	2KV	
C708	1-130-338-11	FILM	0.01MF	10%	630V	
C713	1-108-704-11	MYLAR	0.1MF	10%	200V	
C714	1-102-116-00	CERAMIC	680PF	10%	50V	
C715	1-102-116-00	CERAMIC	680PF	10%	50V	
C716	1-102-116-00	CERAMIC	680PF	10%	50V	
C717	1-162-116-00	CERAMIC	680PF	10%	2KV	
C718	1-162-115-00	CERAMIC	330PF	10%	2KV	
C720	1-162-116-00	CERAMIC	680PF	10%	2KV	
C721	1-162-116-00	CERAMIC	680PF	10%	2KV	
C722	1-162-116-00	CERAMIC	680PF	10%	2KV	
		<DIODE>				
D701	8-719-911-19	DIODE 1SS119				
D702	8-719-911-19	DIODE 1SS119				
D703	8-719-911-19	DIODE 1SS119				
D704	8-719-911-19	DIODE 1SS119				
D705	8-719-911-19	DIODE 1SS119				
D706	8-719-911-19	DIODE 1SS119				
D707	8-719-901-83	DIODE 1SS83				
D708	8-719-901-83	DIODE 1SS83				
D709	8-719-901-83	DIODE 1SS83				
D713	8-719-901-83	DIODE 1SS83				
D715	8-719-901-83	DIODE 1SS83				
D716	8-719-901-83	DIODE 1SS83				
D717	8-719-901-83	DIODE 1SS83				
		<FILTER>				
FL701	1-236-058-11	ENCAPSULATED COMPONENT				
FL702	1-236-058-11	ENCAPSULATED COMPONENT				
FL703	1-236-058-11	ENCAPSULATED COMPONENT				
		<TRANSISTOR>				
Q701	8-729-119-78	TRANSISTOR 2SC2785-HFE				
Q702	8-729-119-78	TRANSISTOR 2SC2785-HFE				
Q703	8-729-119-78	TRANSISTOR 2SC2785-HFE				
Q704	8-729-200-17	TRANSISTOR 2SA1091				
Q705	8-729-200-17	TRANSISTOR 2SA1091				
Q706	8-729-200-17	TRANSISTOR 2SA1091				
Q707	8-729-326-11	TRANSISTOR 2SC2611				
Q708	8-729-326-11	TRANSISTOR 2SC2611				
Q709	8-729-326-11	TRANSISTOR 2SC2611				
Q710	8-729-200-17	TRANSISTOR 2SA1091				
Q711	8-729-200-17	TRANSISTOR 2SA1091				
Q712	8-729-200-17	TRANSISTOR 2SA1091				
Q713	8-729-255-12	TRANSISTOR 2SC2551				
Q714	8-729-255-12	TRANSISTOR 2SC2551				
Q715	8-729-255-12	TRANSISTOR 2SC2551				
Q716	8-729-255-12	TRANSISTOR 2SC2551				
Q717	8-729-255-12	TRANSISTOR 2SC2551				
		<RESISTOR>				
R702	1-215-480-00	METAL	300K	1%	1/6W	
R704	1-215-408-00	METAL	300	1%	1/6W	
R705	1-249-410-11	CARBON	270	5%	1/4W	
R706	1-249-410-11	CARBON	270	5%	1/4W	
R707	1-249-420-11	CARBON	1.8K	5%	1/4W	
R708	1-249-419-11	CARBON	1.5K	5%	1/4W	
R709	1-249-420-11	CARBON	1.8K	5%	1/4W	
R710	1-249-397-11	CARBON	22	5%	1/4W	
R711	1-249-397-11	CARBON	22	5%	1/4W	
R712	1-249-397-11	CARBON	22	5%	1/4W	
R715	1-202-818-00	SOLID	1K	10%	1/2W	
R716	1-216-486-00	METAL OXIDE	8.2K	5%	3W	F
R717	1-202-818-00	SOLID	1K	10%	1/2W	
R718	1-216-486-00	METAL OXIDE	8.2K	5%	3W	F

C V

REF.NO.	PART NO.	DESCRIPTION				REMARK
R719	1-202-818-00	SOLID	1K	10%	1/2W	
R720	1-216-486-00	METAL OXIDE	8.2K	5%	3W	F
R721	1-216-372-11	METAL OXIDE	1.8	5%	2W	F
R722	1-202-848-00	SOLID	680K	10%	1/2W	
R723	1-202-838-00	SOLID	100K	10%	1/2W	
R724	1-202-842-11	SOLID	220K	10%	1/2W	
R725	1-202-719-00	SOLID	1M	10%	1/2W	
R731	1-249-409-11	CARBON	220	5%	1/4W	
R732	1-249-409-11	CARBON	220	5%	1/4W	
R733	1-249-409-11	CARBON	220	5%	1/4W	
R734	1-249-409-11	CARBON	220	5%	1/4W	F
R735	1-249-409-11	CARBON	220	5%	1/4W	F
R736	1-249-409-11	CARBON	220	5%	1/4W	F
R737	1-249-405-11	CARBON	100	5%	1/4W	
R738	1-249-405-11	CARBON	100	5%	1/4W	
R739	1-249-405-11	CARBON	100	5%	1/4W	
R740	1-249-429-11	CARBON	10K	5%	1/4W	F
R741	1-249-429-11	CARBON	10K	5%	1/4W	F
R742	1-249-429-11	CARBON	10K	5%	1/4W	F
R743	1-249-441-11	CARBON	100K	5%	1/4W	
R744	1-249-429-11	CARBON	10K	5%	1/4W	
R745	1-249-429-11	CARBON	10K	5%	1/4W	
R746	1-215-902-11	METAL OXIDE	47K	5%	1W	F
R747	1-247-725-11	CARBON	10K	5%	1/4W	F
R748	1-247-713-11	CARBON	1K	5%	1/4W	F
R749	1-215-902-11	METAL OXIDE	47K	5%	2W	F
R750	1-249-400-11	CARBON	39	5%	1/4W	F
R751	1-247-887-00	CARBON	220K	5%	1/4W	
R752	1-247-887-00	CARBON	220K	5%	1/4W	
R753	1-247-887-00	CARBON	220K	5%	1/4W	

<VARIABLE RESISTOR>

RV707	1-230-641-11	RES, ADJ, METAL GLAZE	2.2M
RV708	1-230-798-11	RES, ADJ, METAL GLAZE	90M
RV709	1-230-641-11	RES, ADJ, METAL GLAZE	2.2M

****

*1-629-148-11 V BOARD
****

<CAPACITOR>

C1700	1-124-120-11	ELECT	220MF	20%	25V
C1701	1-101-004-00	CERAMIC	0.01MF		50V
C1702	1-102-978-00	CERAMIC	220PF	5%	50V
C1703	1-102-978-00	CERAMIC	220PF	5%	50V
C1705	1-124-499-11	ELECT	1MF	20%	50V
C1706	1-124-499-11	ELECT	1MF	20%	50V
C1707	1-124-120-11	ELECT	220MF	20%	25V
C1710	1-101-884-00	CERAMIC	56PF	5%	50V
C1711	1-101-884-00	CERAMIC	56PF	5%	50V

<DIODE>

D1700	8-719-911-19	DIODE 1SS119
D1701	8-719-936-56	DIODE DAN209S
D1702	8-719-936-56	DIODE DAN209S
D1703	8-719-936-56	DIODE DAN209S
D1704	8-719-936-56	DIODE DAN209S
D1705	8-719-933-28	DIODE DAP209S
D1706	8-719-933-28	DIODE DAP209S
D1707	8-719-911-19	DIODE 1SS119
D1708	8-719-911-19	DIODE 1SS119

<TRANSISTOR>

REF.NO.	PART NO.	DESCRIPTION	REMARK
Q1700	8-729-119-78	TRANSISTOR 2SC2785-HFE	
Q1701	8-729-119-78	TRANSISTOR 2SC2785-HFE	
Q1702	8-729-119-78	TRANSISTOR 2SC2785-HFE	
Q1703	8-729-119-78	TRANSISTOR 2SC2785-HFE	
Q1704	8-729-119-78	TRANSISTOR 2SC2785-HFE	
Q1705	8-729-119-78	TRANSISTOR 2SC2785-HFE	
Q1706	8-729-900-89	TRANSISTOR DTC144ES	
Q1707	8-729-900-89	TRANSISTOR DTC144ES	
Q1708	8-729-115-30	TRANSISTOR 2SK105A-40	
Q1709	8-729-115-30	TRANSISTOR 2SK105A-40	
Q1710	8-729-119-78	TRANSISTOR 2SC2785-HFE	
Q1711	8-729-119-78	TRANSISTOR 2SC2785-HFE	

<RESISTOR>

R1700	1-249-426-11	CARBON	5.6K	5%	1/4W
R1701	1-249-413-11	CARBON	470	5%	1/4W
R1702	1-249-413-11	CARBON	470	5%	1/4W
R1703	1-249-413-11	CARBON	470	5%	1/4W
R1704	1-249-413-11	CARBON	470	5%	1/4W
R1705	1-247-885-00	CARBON	180K	5%	1/4W
R1706	1-249-437-11	CARBON	47K	5%	1/4W
R1707	1-247-883-00	CARBON	150K	5%	1/4W
R1708	1-249-437-11	CARBON	47K	5%	1/4W
R1709	1-249-429-11	CARBON	10K	5%	1/4W
R1710	1-249-438-11	CARBON	56K	5%	1/4W
R1711	1-249-429-11	CARBON	10K	5%	1/4W
R1712	1-249-429-11	CARBON	10K	5%	1/4W
R1713	1-249-429-11	CARBON	10K	5%	1/4W
R1714	1-249-429-11	CARBON	10K	5%	1/4W
R1715	1-249-429-11	CARBON	10K	5%	1/4W
R1716	1-249-438-11	CARBON	56K	5%	1/4W
R1717	1-249-429-11	CARBON	10K	5%	1/4W
R1718	1-249-429-11	CARBON	10K	5%	1/4W
R1719	1-249-417-11	CARBON	1K	5%	1/4W
R1720	1-249-429-11	CARBON	10K	5%	1/4W
R1721	1-249-429-11	CARBON	10K	5%	1/4W
R1722	1-249-429-11	CARBON	10K	5%	1/4W
R1723	1-249-429-11	CARBON	10K	5%	1/4W
R1724	1-249-429-11	CARBON	10K	5%	1/4W
R1725	1-247-891-00	CARBON	330K	5%	1/4W
R1726	1-247-891-00	CARBON	330K	5%	1/4W
R1727	1-249-437-11	CARBON	47K	5%	1/4W
R1728	1-249-437-11	CARBON	47K	5%	1/4W
R1729	1-249-405-11	CARBON	100	5%	1/4W
R1730	1-249-405-11	CARBON	100	5%	1/4W
R1731	1-249-417-11	CARBON	1K	5%	1/4W
R1732	1-249-417-11	CARBON	1K	5%	1/4W
R1733	1-249-409-11	CARBON	220	5%	1/4W
R1734	1-249-409-11	CARBON	220	5%	1/4W
R1750	1-249-423-11	CARBON	3.3K	5%	1/4W

<VARIABLE RESISTOR>

RV1700	1-228-995-00	RES, ADJ, CARBON	22K
RV1701	1-228-995-00	RES, ADJ, CARBON	22K
RV1702	1-228-995-00	RES, ADJ, CARBON	22K
RV1703	1-228-995-00	RES, ADJ, CARBON	22K
RV1704	1-237-524-21	RES, ADJ, CARBON	1M
RV1705	1-228-999-00	RES, ADJ, CARBON	470K
RV1706	1-228-999-00	RES, ADJ, CARBON	470K

For Service Manuals
MAURITRON SERVICES
8 Cherry Tree Road, Chinnor
Oxfordshire, OX9 4QY.
Tel (01844) 351694
Fax (01844) 352554
email:- mauritron@dial.pipex.com

REF.NO.	PART NO.	DESCRIPTION				REMARK
RV1707	1-237-524-21	RES, ADJ, CARBON 1M				
RV1708	1-228-995-00	RES, ADJ, CARBON 22K				
RV1709	1-228-995-00	RES, ADJ, CARBON 22K				
RV1710	1-228-995-00	RES, ADJ, CARBON 22K				

<CONNECTOR>

REF.NO.	PART NO.	DESCRIPTION	REMARK
V1	*1-563-720-11	SOCKET, CONNECTOR (PC BOARD)9P	
V2	*1-563-720-11	SOCKET, CONNECTOR (PC BOARD)9P	

****

*1-629-149-11 W BOARD
****

<CAPACITOR>

REF.NO.	PART NO.	DESCRIPTION				REMARK
C1400	1-136-169-00	FILM	0.22MF	5%	50V	
C1401	1-136-153-00	FILM	0.01MF	5%	50V	
C1402	1-124-478-11	ELECT	100MF	20%	25V	
C1403	1-102-074-00	CERAMIC	0.001MF	10%	50V	
C1404	1-124-478-11	ELECT	100MF	20%	25V	
C1405	1-123-875-11	ELECT	10MF	20%	50V	
C1406	1-124-902-00	ELECT	0.47MF	20%	50V	

<DIODE>

REF.NO.	PART NO.	DESCRIPTION	REMARK
D1400	8-719-911-19	DIODE 1SS119	
D1401	8-719-911-19	DIODE 1SS119	

<IC>

REF.NO.	PART NO.	DESCRIPTION	REMARK
IC1400	8-759-135-80	IC UPC358C	

<TRANSISTOR>

REF.NO.	PART NO.	DESCRIPTION	REMARK
Q1400	8-729-119-78	TRANSISTOR 2SC2785-HFE	
Q1401	8-729-119-76	TRANSISTOR 2SA1175-HFE	
Q1402	8-729-119-78	TRANSISTOR 2SC2785-HFE	
Q1403	8-729-119-78	TRANSISTOR 2SC2785-HFE	

<RESISTOR>

REF.NO.	PART NO.	DESCRIPTION				REMARK
R1400	1-249-437-11	CARBON	47K	5%	1/4W	
R1401	1-249-415-11	CARBON	680	5%	1/4W	
R1402	1-247-895-00	CARBON	470K	5%	1/4W	
R1403	1-247-903-00	CARBON	1M	5%	1/4W	
R1404	1-249-438-11	CARBON	56K	5%	1/4W	
R1405	1-249-433-11	CARBON	22K	5%	1/4W	
R1406	1-249-411-11	CARBON	330	5%	1/4W	
R1407	1-249-433-11	CARBON	22K	5%	1/4W	
R1408	1-249-411-11	CARBON	330	5%	1/4W	
R1409	1-249-429-11	CARBON	10K	5%	1/4W	
R1410	1-249-409-11	CARBON	220	5%	1/4W	
R1411	1-249-426-11	CARBON	5.6K	5%	1/4W	
R1412	1-249-411-11	CARBON	330	5%	1/4W	
R1413	1-247-883-00	CARBON	150K	5%	1/4W	
R1414	1-249-429-11	CARBON	10K	5%	1/4W	
R1416	1-249-429-11	CARBON	10K	5%	1/4W	
R1417	1-249-433-11	CARBON	22K	5%	1/4W	
R1418	1-249-439-11	CARBON	68K	5%	1/4W	
R1419	1-249-440-11	CARBON	82K	5%	1/4W	
R1420	1-249-441-11	CARBON	100K	5%	1/4W	

<CONNECTOR>

REF.NO.	PART NO.	DESCRIPTION	REMARK
W1	*1-565-482-11	CONNECTOR, BOARD TO BOARD 6P	
W2	*1-564-506-11	PLUG, CONNECTOR 3P	

****

*1-629-150-11 Y BOARD
****

<CAPACITOR>

REF.NO.	PART NO.	DESCRIPTION				REMARK
C1500	1-124-499-11	ELECT	1MF	20%	50V	
C1501	1-102-125-00	CERAMIC	0.0047MF	10%	50V	

<IC>

REF.NO.	PART NO.	DESCRIPTION	REMARK
IC1500	8-759-909-70	IC CX23025	

<TRANSISTOR>

REF.NO.	PART NO.	DESCRIPTION	REMARK
Q1500	8-729-119-78	TRANSISTOR 2SC2785-HFE	
Q1501	8-729-119-78	TRANSISTOR 2SC2785-HFE	
Q1502	8-729-900-63	TRANSISTOR DTA124ES	

<RESISTOR>

REF.NO.	PART NO.	DESCRIPTION				REMARK
R1500	1-249-437-11	CARBON	47K	5%	1/4W	
R1501	1-249-437-11	CARBON	47K	5%	1/4W	
R1502	1-249-437-11	CARBON	47K	5%	1/4W	F
R1503	1-249-429-11	CARBON	10K	5%	1/4W	
R1504	1-249-437-11	CARBON	47K	5%	1/4W	
R1505	1-249-437-11	CARBON	47K	5%	1/4W	

<CONNECTOR>

REF.NO.	PART NO.	DESCRIPTION	REMARK
Y1	*1-565-481-11	CONNECTOR, BOARD TO BOARD 5P	

****

*1-629-153-11 J BOARD
****

<CONNECTOR>

REF.NO.	PART NO.	DESCRIPTION	REMARK
J1	*1-568-106-11	PIN, CONNECTOR 7P	

****

*1-629-151-11 XA BOARD
****

<CAPACITOR>

REF.NO.	PART NO.	DESCRIPTION				REMARK
C1300	1-101-005-00	CERAMIC	0.022MF		50V	
C1301	1-101-888-00	CERAMIC	68PF	5%	50V	
C1302	1-101-884-00	CERAMIC	56PF	5%	50V	
C1303	1-102-942-00	CERAMIC	5PF	1PF	50V	
C1304	1-102-947-00	CERAMIC	10PF	0.5PF	50V	
C1305	1-102-947-00	CERAMIC	10PF	0.5PF	50V	
C1306	1-102-951-00	CERAMIC	15PF	5%	50V	
C1307	1-102-951-00	CERAMIC	15PF	5%	50V	
C1308	1-124-478-11	ELECT	100MF	20%	25V	
C1309	1-102-125-00	CERAMIC	0.0047MF	10%	50V	

The components identified by shading and mark ⚠ are critical for safety.
Replace only with part number specified.

XA **U**

REF.NO.	PART NO.	DESCRIPTION	REMARK
		<TRIMMER>	
CV3	1-141-337-11	CAP, VAR, TRIMMER	
CV4	1-141-337-11	CAP, VAR, TRIMMER	
		<COIL>	
L1300	1-408-429-00	INDUCTOR 470UH	
L1301	1-408-429-00	INDUCTOR 470UH	
L1302	1-408-429-00	INDUCTOR 470UH	
L1303	1-408-429-00	INDUCTOR 470UH	
		<TRANSISTOR>	
Q1300	8-729-119-78	TRANSISTOR 2SC2785-HFE	
Q1301	8-729-900-89	TRANSISTOR DTC144ES	
Q1302	8-729-119-78	TRANSISTOR 2SC2785-HFE	
Q1303	8-729-119-78	TRANSISTOR 2SC2785-HFE	
Q1304	8-729-119-78	TRANSISTOR 2SC2785-HFE	
Q1305	8-729-119-78	TRANSISTOR 2SC2785-HFE	
		<RESISTOR>	
R1301	1-249-413-11	CARBON 470 5% 1/4W	
R1302	1-249-415-11	CARBON 680 5% 1/4W	
R1303	1-249-415-11	CARBON 680 5% 1/4W	
R1304	1-249-427-11	CARBON 6.8K 5% 1/4W	
R1305	1-249-413-11	CARBON 470 5% 1/4W	
R1306	1-249-413-11	CARBON 470 5% 1/4W	
R1308	1-249-417-11	CARBON 1K 5% 1/4W	
R1310	1-249-441-11	CARBON 100K 5% 1/4W	
R1311	1-249-441-11	CARBON 100K 5% 1/4W	
R1312	1-249-441-11	CARBON 100K 5% 1/4W	
R1313	1-249-441-11	CARBON 100K 5% 1/4W	
R1320	1-249-429-11	CARBON 10K 5% 1/4W	
R1321	1-249-429-11	CARBON 10K 5% 1/4W	
R1322	1-249-429-11	CARBON 10K 5% 1/4W	
R1323	1-249-429-11	CARBON 10K 5% 1/4W	
		<CRYSTAL>	
X358	1-567-505-11	OSCILLATOR, CRYSTAL	
X443	1-567-504-11	OSCILLATOR, CRYSTAL	
		<CONNECTOR>	
XA1	*1-565-483-11	CONNECTOR, BOARD TO BOARD 7P	

****

*1-629-219-11 U BOARD (PVM-1440QM ONLY)
****

		<CAPACITOR>	
C1600	1-124-477-11	ELECT 47MF 20% 25V	
C1601	1-124-478-11	ELECT 100MF 20% 25V	
C1602	1-124-902-00	ELECT 0.47MF 20% 50V	
C1603	1-124-499-11	ELECT 1MF 20% 50V	
		<IC>	
IC1600	8-759-913-11	IC CX20125	
		<TRANSISTOR>	
Q1600	8-729-119-76	TRANSISTOR 2SA1175-HFE	
Q1601	8-729-119-78	TRANSISTOR 2SC2785-HFE	
Q1602	8-729-119-78	TRANSISTOR 2SC2785-HFE	
		<RESISTOR>	
R1600	1-247-897-11	CARBON 560K 5% 1/4W	
R1601	1-249-415-11	CARBON 680 5% 1/4W	
R1602	1-249-413-11	CARBON 470 5% 1/4W	
R1603	1-249-403-11	CARBON 68 5% 1/4W	
R1604	1-249-428-11	CARBON 8.2K 5% 1/4W	
R1605	1-249-415-11	CARBON 680 5% 1/4W	
R1606	1-249-413-11	CARBON 470 5% 1/4W	
R1607	1-249-428-11	CARBON 8.2K 5% 1/4W	
R1608	1-247-895-00	CARBON 470K 5% 1/4W	
R1609	1-247-897-11	CARBON 560K 5% 1/4W	
R1610	1-249-437-11	CARBON 47K 5% 1/4W	
		<CONNECTOR>	
U1	*1-565-483-11	CONNECTOR, BOARD TO BOARD 7P	

****

MISCELLANEOUS
****

	1-544-063-11	SPEAKER	
	⚠1-237-614-12	RESISTOR ASSY, HIGH-VOLTAGE	
	⚠1-426-145-13	COIL, DEGAUSSING	
S901	⚠1-554-967-12	SWITCH, PUSH (AC POWER)(1 KEY)	
	⚠1-451-329-11	DEFLECTION YOKE (Y14FZA)	
	1-452-032-00	MAGNET, DISK; 10MM ϕ	
	1-452-094-00	MAGNET, ROTATABLE DISK; 15MM ϕ	
	1-452-277-00	MAGNET, BMC	
	1-466-076-11	CONTROL UNIT (PVM-1442QM ONLY)	
	1-466-075-11	CONTROL UNIT (PVM-1444QM ONLY)	
	1-466-113-11	CONTROL UNIT (PVM-1440QM ONLY)	
	1-543-604-11	CORE, RING	
	⚠1-574-389-12	CORD, POWER (WITH CONNECTOR)	
V901	⚠8-734-621-05	PICTURE TUBE (M34KBE21X) (PVM-1442QM/1444QM ONLY)	
V901	⚠8-736-254-05	PICTURE TUBE (A34JHS10X) (PVM-1440QM ONLY)	

****

ACCESSORIES AND PACKING MATERIALS
****

PART NO.	DESCRIPTION	REMARK
3-786-761-11	MANUAL, INSTRUCTION	
*4-312-246-00	BAG, PROTECTION	
*4-391-866-01	CUSHION (UPPER) (ASSY)	
*4-391-867-01	CUSHION (LOWER) (ASSY)	
*4-391-897-01	INDIVIDUAL CARTON (PVM-1444QM ONLY)	
*4-391-899-01	INDIVIDUAL CARTON (PVM-1440QM ONLY)	
*4-393-301-01	INDIVIDUAL CARTON (PVM-1442QM ONLY)	

9-964-215-01

Sony Corporation
Display Products Group

English
91JG0220-4
Printed in Japan
©1989.3

PVM-1440QM/1442QM/1444QM

SONY®
SERVICE MANUAL

AEP Model

PVM-1440QM
Serial No. 2,002,901 and later
Chassis No. SCC-C57A-A
PVM-1442QM
Serial No. 2,003,251 and later
Chassis No. SCC-C56A-A
PVM-1444QM
Serial No. 2,001,601 and later
Chassis No. SCC-C55A-A

SUPPLEMENT-1

File this Supplement with the Service Manual.

INTRODUCTION
A and W boards modification
☛ : Indicate modification portion

MICROFILM

TABLE OF CONTENTS

6. DIAGRAMS

6-2. Block Diagrams 3
6-5. Schematic Diagram 6
6-3. Printed Wiring Boards 9

7. EXPLODED VIEWS

7-1. Chassis 11

8. ELECTRICAL PARTS LIST 12

6-2. BLOCK DIAGRAMS Page 31 – 32

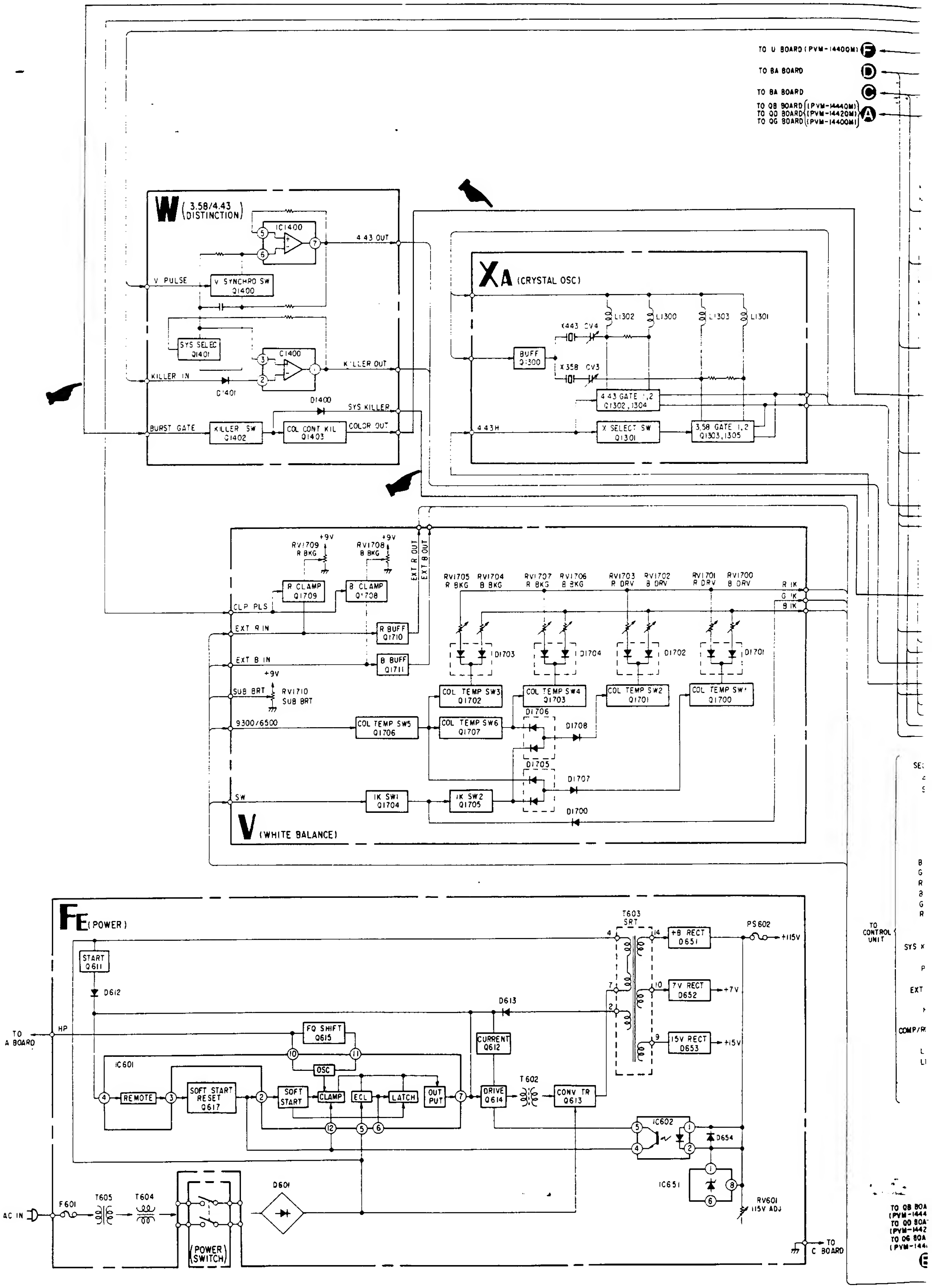
TO U BOARD (PVM-1440QM) F
TO BA BOARD D
TO BA BOARD C
TO QB BOARD (PVM-1444QM)
TO QD BOARD (PVM-1442QM)
TO QG BOARD (PVM-1440QM)
A
W (3.58/4.43 DISTINCTION)
IC1400
4.43 OUT
V PULSE
V SYNCHRO SW Q1400
SYS SELEC Q1401
IC1400
KILLER OUT
KILLER IN
D1401
D1400
SYS KILLER
BURST GATE
KILLER SW Q1402
COL CONT KIL Q1403
COLOR OUT
XA (CRYSTAL OSC)
L1302
L1300
L1303
L1301
X443
CV4
BUFF Q1300
X358
CV3
4.43 GATE 1,2 Q1302,1304
4.43H
X SELECT SW Q1301
3.58 GATE 1,2 Q1303,1305
+9V
RV1709 R BKG
+9V
RV1708 B BKG
EXT R OUT
EXT B OUT
R CLAMP Q1709
B CLAMP Q1708
CLP PLS
EXT R IN
R BUFF Q1710
EXT B IN
B BUFF Q1711
+9V
SUB BRT
RV1710 SUB BRT
9300/6500
SW
RV1705 R BKG
RV1704 B BKG
RV1707 R BKG
RV1706 B BKG
RV1703 R DRV
RV1702 B DRV
RV1701 R DRV
RV1700 B DRV
R IK
G IK
B IK
D1703
D1704
D1702
D1701
COL TEMP SW3 Q1702
COL TEMP SW4 Q1703
COL TEMP SW2 Q1701
COL TEMP SW1 Q1700
COL TEMP SW5 Q1706
COL TEMP SW6 Q1707
D1706
D1708
D1705
D1707
IK SW1 Q1704
IK SW2 Q1705
D1700
V (WHITE BALANCE)
FE (POWER)
T603 SRT
4
14
+B RECT D651
PS602
+115V
START Q611
D612
7
10
7V RECT D652
+7V
D613
2
9
15V RECT D653
+15V
TO A BOARD
HP
FQ SHIFT Q615
CURRENT Q612
IC601
10
11
OSC
4
REMOTE
SOFT START RESET Q617
2
SOFT START
CLAMP
ECL
LATCH
OUT PUT
7
DRIVE Q614
T602
CONV TR Q613
12
5
6
IC602
5
1
4
2
D654
IC651
1
8
6
RV601 115V ADJ
AC IN
F601
T605
T604
D601
POWER SWITCH
TO C BOARD
TO CONTROL UNIT
SE
B
G
R
B
G
R
SYS K
P
EXT
COMP/R
L
LI
TO QB BOA
(PVM-1444
TO QD BOA
(PVM-1442
TO QG BOA
(PVM-144
E

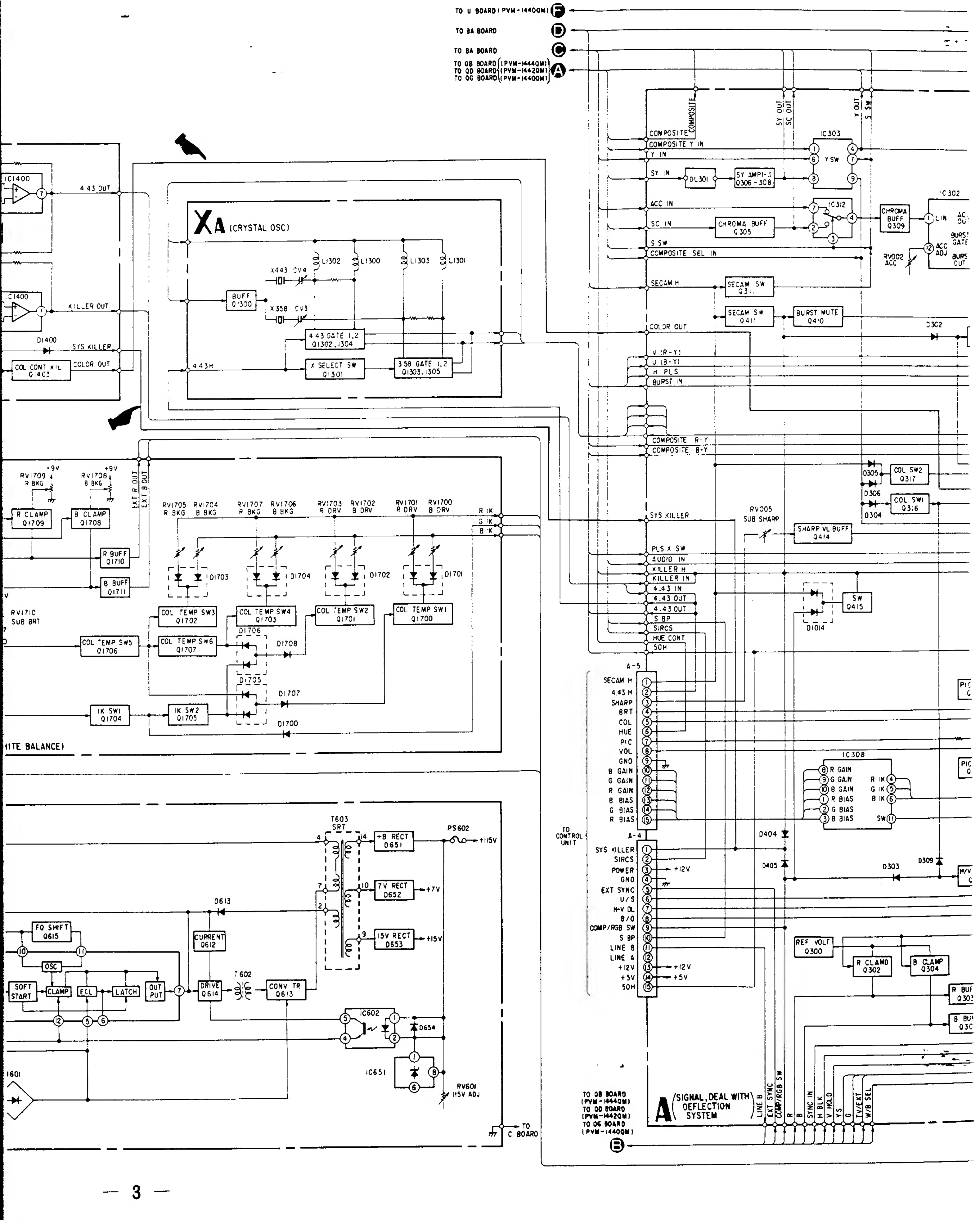
TO U BOARD (PVM-1440QM) F
TO BA BOARD D
TO BA BOARD C
TO QB BOARD (PVM-1444QM)
TO QD BOARD (PVM-1442QM)
TO QG BOARD (PVM-1440QM) A
IC1400
4.43 OUT
KILLER OUT
D1400
SYS KILLER
COL CONT KIL Q1403
COLOR OUT
XA (CRYSTAL OSC)
X443 CV4
X358 CV3
L1302
L1300
L1303
L1301
BUFF Q1300
4.43 GATE 1,2 Q1302,1304
4.43H
X SELECT SW Q1301
3.58 GATE 1,2 Q1303,1305
RV1709 R BKG
RV1708 B BKG
+9V
R CLAMP Q1709
B CLAMP Q1708
R BUFF Q1710
B BUFF Q1711
EXT R OUT
EXT B OUT
RV1705 R BKG
RV1704 B BKG
RV1707 R BKG
RV1706 B BKG
RV1703 R DRV
RV1702 B DRV
RV1701 R DRV
RV1700 B DRV
R IK
G IK
B IK
D1703
D1704
D1702
D1701
COL TEMP SW3 Q1702
COL TEMP SW4 Q1703
COL TEMP SW2 Q1701
COL TEMP SW1 Q1700
COL TEMP SW5 Q1706
COL TEMP SW6 Q1707
D1706
D1708
D1705
D1707
D1700
IK SW1 Q1704
IK SW2 Q1705
RV1710 SUB BRT
(WHITE BALANCE)
T603 SRT
+B RECT D651
7V RECT D652
15V RECT D653
PS602
+115V
+7V
+15V
D613
FQ SHIFT Q615
CURRENT Q612
OSC
SOFT START
CLAMP
ECL
LATCH
OUT PUT
DRIVE Q614
T602
CONV TR Q613
IC602
D654
IC651
RV601 115V ADJ
I601
TO C BOARD
COMPOSITE
COMPOSITE Y IN
Y IN
SY IN
DL301
SY AMP1-3 Q306-308
IC303
Y SW
SY OUT
SC OUT
Y OUT
S SW
ACC IN
SC IN
CHROMA BUFF Q305
IC312
S SW
COMPOSITE SEL IN
CHROMA BUFF Q309
IC302
ACC ADJ
BURST GATE
BURST OUT
RV002 ACC
SECAM H
SECAM SW Q3
SECAM SW Q41
BURST MUTE Q410
D302
COLOR OUT
V (R-Y)
U (B-Y)
H PLS
BURST IN
COMPOSITE R-Y
COMPOSITE B-Y
D305
D306
D304
COL SW2 Q317
COL SW1 Q316
SYS KILLER
RV005 SUB SHARP
SHARP VL BUFF Q414
PLS X SW
AUDIO IN
KILLER H
KILLER IN
4.43 IN
4.43 OUT
4.43 OUT
S BP
SIRCS
HUE CONT
50H
SW Q415
D1014
A-5
SECAM H
4.43 H
SHARP
BRT
COL
HUE
PIC
VOL
GND
B GAIN
G GAIN
R GAIN
B BIAS
G BIAS
R BIAS
IC308
R GAIN
G GAIN
B GAIN
R BIAS
G BIAS
B BIAS
R IK
G IK
B IK
SW
TO CONTROL UNIT
A-4
SYS KILLER
SIRCS
POWER
GND
EXT SYNC
U/S
H-V DL
B/O
COMP/RGB SW
S BP
LINE B
LINE A
+12V
+5V
50H
+12V
+12V
+5V
D404
D405
D303
D309
REF VOLT Q300
R CLAMP Q302
B CLAMP Q304
R BUF Q303
B BUF Q30
H/V
TO QB BOARD (PVM-1444QM)
TO QD BOARD (PVM-1442QM)
TO QG BOARD (PVM-1400QM)
B
A (SIGNAL DEAL WITH DEFLECTION SYSTEM)
LINE B
EXT SYNC
COMP/RGB SW
R
B
SYNC IN
H BLK
V HOLD
YS
G
TV/EXT
W/B SEL

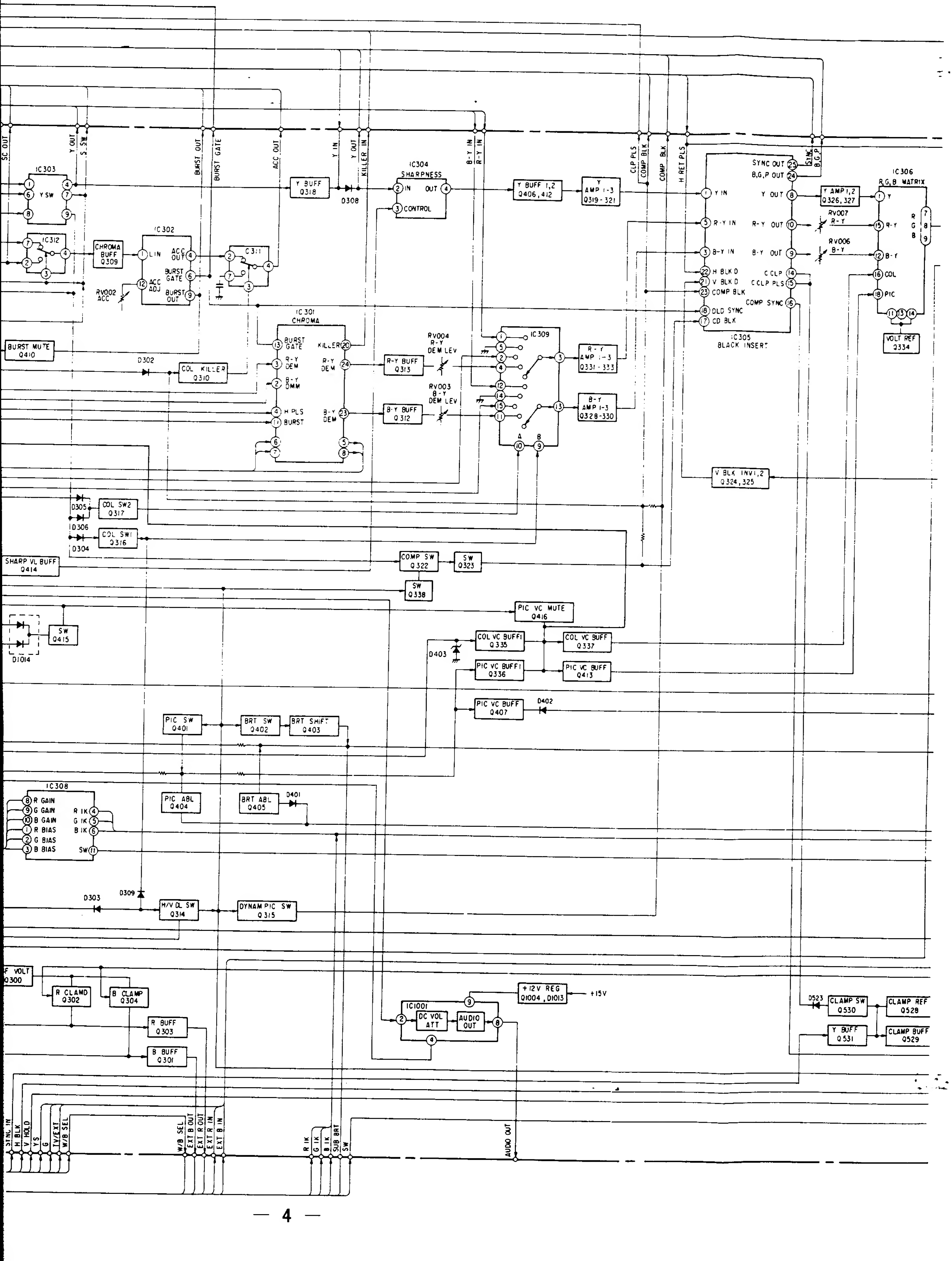
SC OUT
Y OUT
S. SW
IC303
Y SW
IC312
CHROMA BUFF Q309
IC302
LIN
ACC OUT
BURST GATE
BURST OUT
ACC ADJ
RV002 ACC
BURST OUT
BURST GATE
ACC OUT
C311
BURST MUTE Q410
D302
COL KILLER Q310
IC301 CHROMA
BURST GATE
R-Y DEM
B-Y DMM
H PLS
BURST
KILLER
R-Y DEM
B-Y DEM
Y IN
Y OUT
KILLER IN
Y BUFF Q318
D308
IC304 SHARPNESS
IN
OUT
CONTROL
B-Y IN
R-Y IN
R-Y BUFF Q313
B-Y BUFF Q312
RV004 R-Y DEM LEV
RV003 B-Y DEM LEV
IC309
A
B
R-Y AMP 1-3 Q331-333
B-Y AMP 1-3 Q328-330
Y BUFF 1,2 Q406,412
Y AMP 1-3 Q319-321
CLP PLS
COMP BLK
COMP BLK
H RET PLS
SYNC OUT
B,G,P OUT
SYNC
B,G,P
Y IN
Y OUT
R-Y IN
R-Y OUT
B-Y IN
B-Y OUT
H BLK O
V BLK O
COMP BLK
C CLP
C CLP PLS
COMP SYNC
OLD SYNC
CD BLK
IC305 BLACK INSERT
RV007 R-Y
RV006 B-Y
Y AMP 1,2 Q326,327
IC306 R,G,B MATRIX
Y
R-Y
B-Y
COL
PIC
R
G
B
VOLT REF Q334
V BLK INV1,2 Q324,325
D305
COL SW2 Q317
D306
COL SW1 Q316
D304
SHARP VL BUFF Q414
COMP SW Q322
SW Q323
SW Q338
PIC VC MUTE Q416
SW Q415
D1014
COL VC BUFF1 Q335
COL VC BUFF Q337
D403
PIC VC BUFF1 Q336
PIC VC BUFF Q413
PIC VC BUFF Q407
D402
PIC SW Q401
BRT SW Q402
BRT SHIFT Q403
PIC ABL Q404
BRT ABL Q405
D401
IC308
R GAIN
G GAIN
B GAIN
R BIAS
G BIAS
B BIAS
R IK
G IK
B IK
SW
D303
D309
H/V DL SW Q314
DYNAM PIC SW Q315
F VOLT Q300
R CLAMD Q302
B CLAMP Q304
R BUFF Q303
B BUFF Q301
+12V REG Q1004, D1013
+15V
IC1001
DC VOL ATT
AUDIO OUT
D523
CLAMP SW Q530
CLAMP REF Q528
Y BUFF Q531
CLAMP BUFF Q529
SYNC IN
H BLK
V HOLD
YS
G
TV/EXT
W/B SEL
W/B SEL
EXT B OUT
EXT R OUT
EXT R IN
EXT B IN
R IK
G IK
B IK
SUB BRT
SW
AUDIO OUT

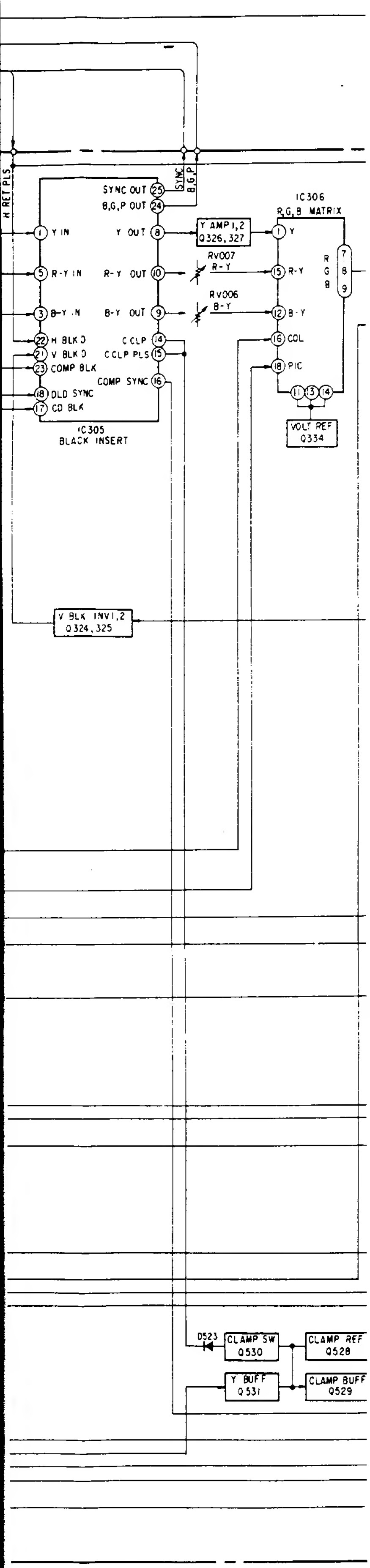
H RET PLS
SYNC
B,G,P
SYNC OUT 25
B,G,P OUT 24
1 Y IN
Y OUT 8
5 R-Y IN
R-Y OUT 10
3 B-Y IN
B-Y OUT 9
22 H BLK D
C CLP 14
21 V BLK D
C CLP PLS 15
23 COMP BLK
COMP SYNC 16
18 OLD SYNC
17 CD BLK
IC305
BLACK INSERT
Y AMP 1,2
Q326, 327
RV007
R-Y
RV006
B-Y
IC306
R,G,B MATRIX
1 Y
15 R-Y
12 B-Y
16 COL
18 PIC
11 13 14
R
G
B
7
8
9
VOLT REF
Q334
V BLK INV 1,2
Q324, 325
D523
CLAMP SW
Q530
CLAMP REF
Q528
Y BUFF
Q531
CLAMP BUFF
Q529

6-5. SCHEMATIC DIAGRAM Page 42-45

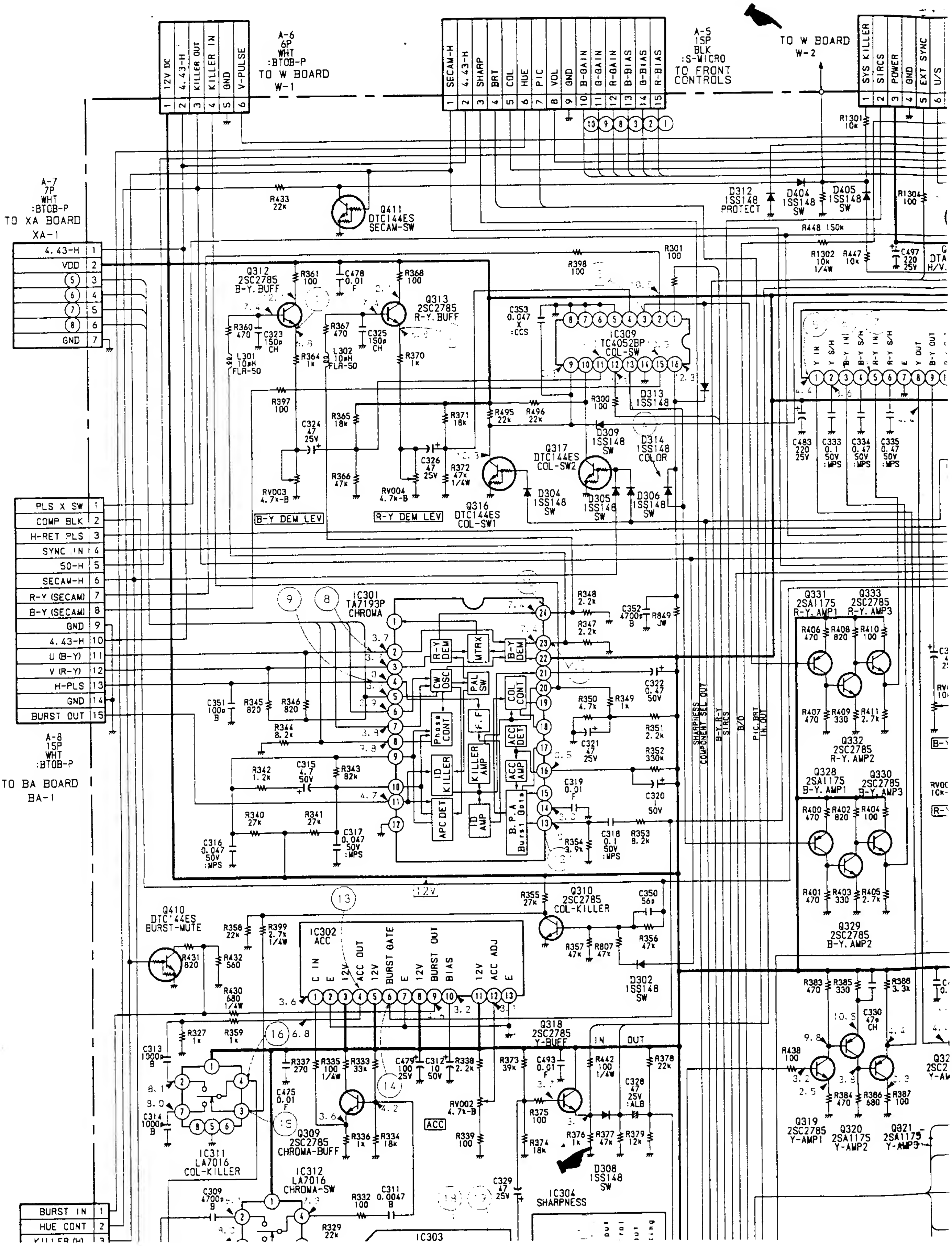
A-6 6P WHT :BTOB-P TO W BOARD W-1
12V DC
4.43-H
KILLER OUT
KILLER IN
GND
V-PULSE
A-5 15P BLK :S-MICRO TO FRONT CONTROLS
SECAM-H
4.43-H
SHARP
BRT
COL
HUE
PIC
VOL
GND
B-GAIN
G-GAIN
R-GAIN
B-BIAS
G-BIAS
R-BIAS
TO W BOARD W-2
SYS KILLER
SIRCS
POWER
GND
EXT SYNC
U/S
A-7 7P WHT :BTOB-P TO XA BOARD XA-1
4.43-H
VDD
GND
Q411 DTC144ES SECAM-SW
Q312 2SC2785 B-Y. BUFF
Q313 2SC2785 R-Y. BUFF
IC309 TC4052BP COL-SW
D312 1SS148 PROTECT
D404 1SS148 SW
D405 1SS148 SW
B-Y DEM LEV
R-Y DEM LEV
Q316 DTC144ES COL-SW1
Q317 DTC144ES COL-SW2
D309 1SS148 SW
D314 1SS148 COLOR
D304 1SS148 SW
D305 1SS148 SW
D306 1SS148 SW
D313 1SS148
PLS X SW
COMP BLK
H-RET PLS
SYNC IN
50-H
SECAM-H
R-Y (SECAM)
B-Y (SECAM)
GND
4.43-H
U (B-Y)
V (R-Y)
H-PLS
GND
BURST OUT
A-8 15P WHT :BTOB-P TO BA BOARD BA-1
IC301 TA7193P CHROMA
R-Y DEM
MTRX
B-Y DEM
CW OSC
PAL SW
Phase CONT
F.F
COL CONT
ACC DET
ID KILLER
KILLER AMP
ACC AMP
APC DET
ID AMP
B.P.A Burst Gate
SHARPNESS COMPONENT SEL OUT
B-Y R-Y SIRCS
B/O
PIC BRT IN OUT
Q331 2SA1175 R-Y. AMP1
Q333 2SC2785 R-Y. AMP3
Q332 2SC2785 R-Y. AMP2
Q328 2SA1175 B-Y. AMP1
Q330 2SC2785 B-Y. AMP3
Q329 2SC2785 B-Y. AMP2
12V
Q410 DTC144ES BURST-MUTE
IC302 ACC
C IN
E
12V
ACC OUT
12V
BURST GATE
E
12V
BURST OUT
BIAS
12V
ACC ADJ
E
Q310 2SC2785 COL-KILLER
D302 1SS148 SW
Q318 2SC2785 Y-BUFF
IN
OUT
IC311 LA7016 COL-KILLER
Q309 2SC2785 CHROMA-BUFF
ACC
D308 1SS148 SW
IC304 SHARPNESS
Q319 2SC2785 Y-AMP1
Q320 2SA1175 Y-AMP2
Q321 2SA1175 Y-AMP3
IC312 LA7016 CHROMA-SW
IC303
BURST IN
HUE CONT
KILLER (H)

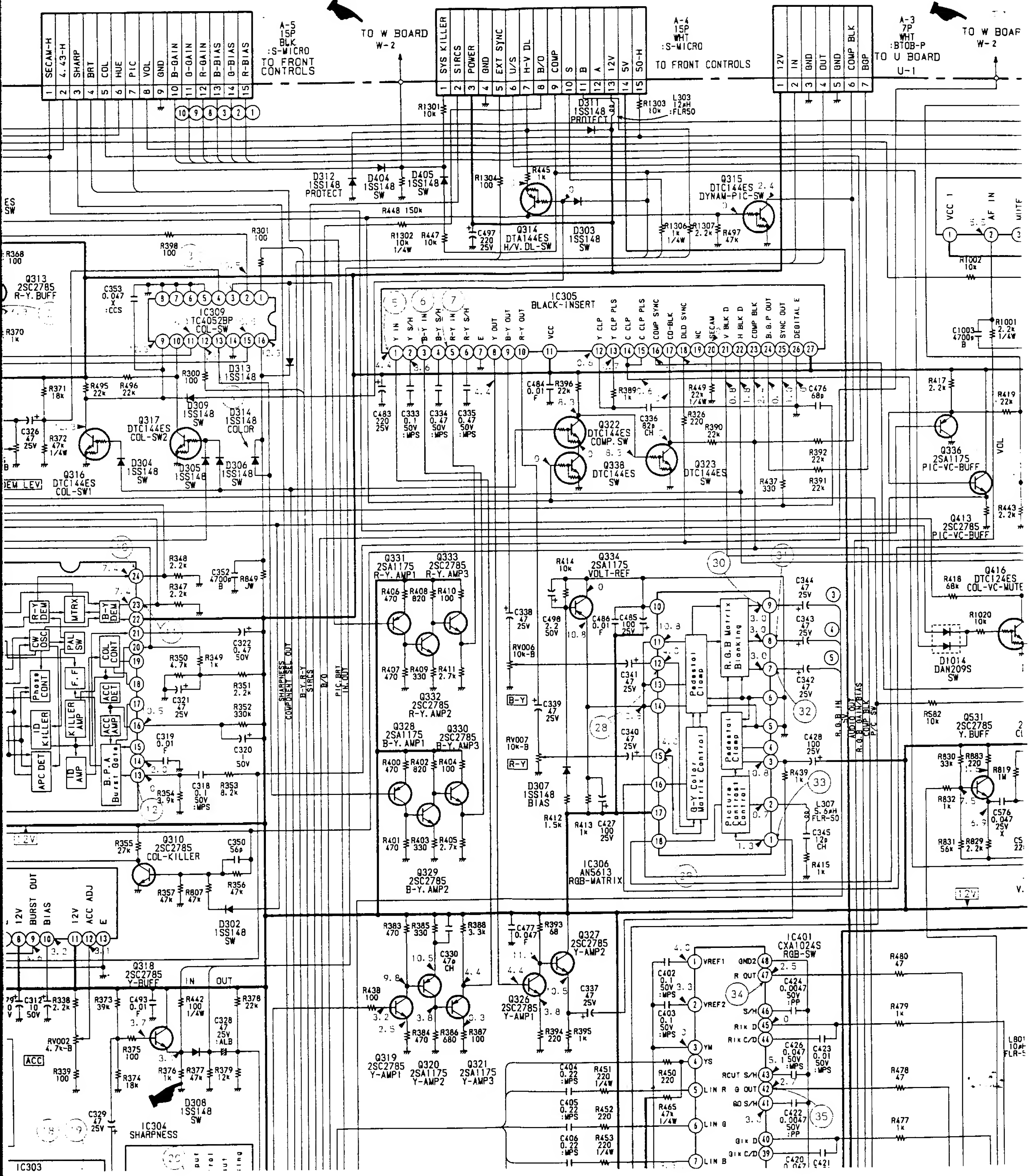
A-5
15P
BLK
:S-MICRO
TO FRONT CONTROLS
SECAM-H
4.43-H
SHARP
BRT
COL
HUE
PIC
VOL
GND
B-GAIN
G-GAIN
R-GAIN
B-BIAS
G-BIAS
R-BIAS
TO W BOARD
W-2
SYS KILLER
SIRCS
POWER
GND
EXT SYNC
U/S
H-V DL
B/O
COMP
S
B
A
12V
5V
50-H
A-4
15P
WHT
:S-MICRO
TO FRONT CONTROLS
12V
IN
GND
OUT
GND
COMP BLK
BGP
A-3
7P
WHT
:BTOB-P
TO U BOARD
U-1
TO W BOARD
W-2
D311
1SS148
PROTECT
L303
12μH
:FLR50
D312
1SS148
PROTECT
D404
1SS148
SW
D405
1SS148
SW
R448 150k
Q314
DTA144ES
H/V.DL-SW
D303
1SS148
SW
Q315
DTC144ES
DYNAM-PIC-SW
Q313
2SC2785
R-Y.BUFF
IC309
TC4052BP
COL-SW
D313
1SS148
D309
1SS148
SW
D314
1SS148
COLOR
Q317
DTC144ES
COL-SW2
Q316
DTC144ES
COL-SW1
D304
1SS148
SW
D305
1SS148
SW
D306
1SS148
SW
DEM LEV
IC305
BLACK-INSERT
Y IN
Y S/H
B-Y IN
B-Y S/H
R-Y IN
R-Y S/H
E
Y OUT
B-Y OUT
R-Y OUT
VCC
Y CLP
Y CLP PLS
C CLP
C CLP PLS
COMP SYNC
CD-BLK
DLD SYNC
NC
SECAM
V BLK D
H BLK D
COMP BLK
B.B.P OUT
SYNC OUT
DEGITAL E
Q322
DTC144ES
COMP.SW
Q338
DTC144ES
SW
Q323
DTC144ES
SW
Q336
2SA1175
PIC-VC-BUFF
Q413
2SC2785
PIC-VC-BUFF
VCC
AF IN
MUTE
VOL
R-Y DEM
MTRX
B-Y DEM
CW OSC
PAL SW
COL CONT
Phase CONT
F.F
ACC DET
ID KILLER
KILLER AMP
ACC AMP
APC DET
ID AMP
B.P.A Burst Gate
SHARPNESS
COMPONENT SEL OUT
B-Y,R-Y
SIRCS
B/O
PIC,BRT
IN,OUT
Q331
2SA1175
R-Y.AMP1
Q333
2SC2785
R-Y.AMP3
Q332
2SC2785
R-Y.AMP2
Q328
2SA1175
B-Y.AMP1
Q330
2SC2785
B-Y.AMP3
Q329
2SC2785
B-Y.AMP2
Q334
2SA1175
VOLT-REF
RV006
10k-B
RV007
10k-B
B-Y
R-Y
D307
1SS148
BIAS
IC306
AN5613
RGB-MATRIX
Pedestal Clamp
R.G.B Matrix Blanking
B-Y Color Matrix Control
Pedestal Clamp
Picture Control
R.G.B IN
AUDIO OUT
R.G.B GAIN/BIAS
COMP.BLK
P/C SW
Q416
DTC124ES
COL-VC-MUTE
D1014
DAN209S
SW
Q531
2SC2785
Y.BUFF
L307
5.6μH
FLR-50
Q310
2SC2785
COL-KILLER
D302
1SS148
SW
BURST OUT
BIAS
12V
ACC ADJ
E
12V
Q318
2SC2785
Y-BUFF
IN
OUT
RV002
4.7k-B
ACC
D308
1SS148
SW
IC304
SHARPNESS
IC303
Q319
2SC2785
Y-AMP1
Q320
2SA1175
Y-AMP2
Q321
2SA1175
Y-AMP3
Q327
2SC2785
Y-AMP2
Q326
2SC2785
Y-AMP1
IC401
CXA1024S
RGB-SW
VREF1
VREF2
YM
YS
LIN R
LIN G
LIN B
GND2
R OUT
S/H
RIK D
RIK C/D
RCUT S/H
G OUT
GO S/H
GIK D
GIK C/D
12V
L801
10μH
FLR-5

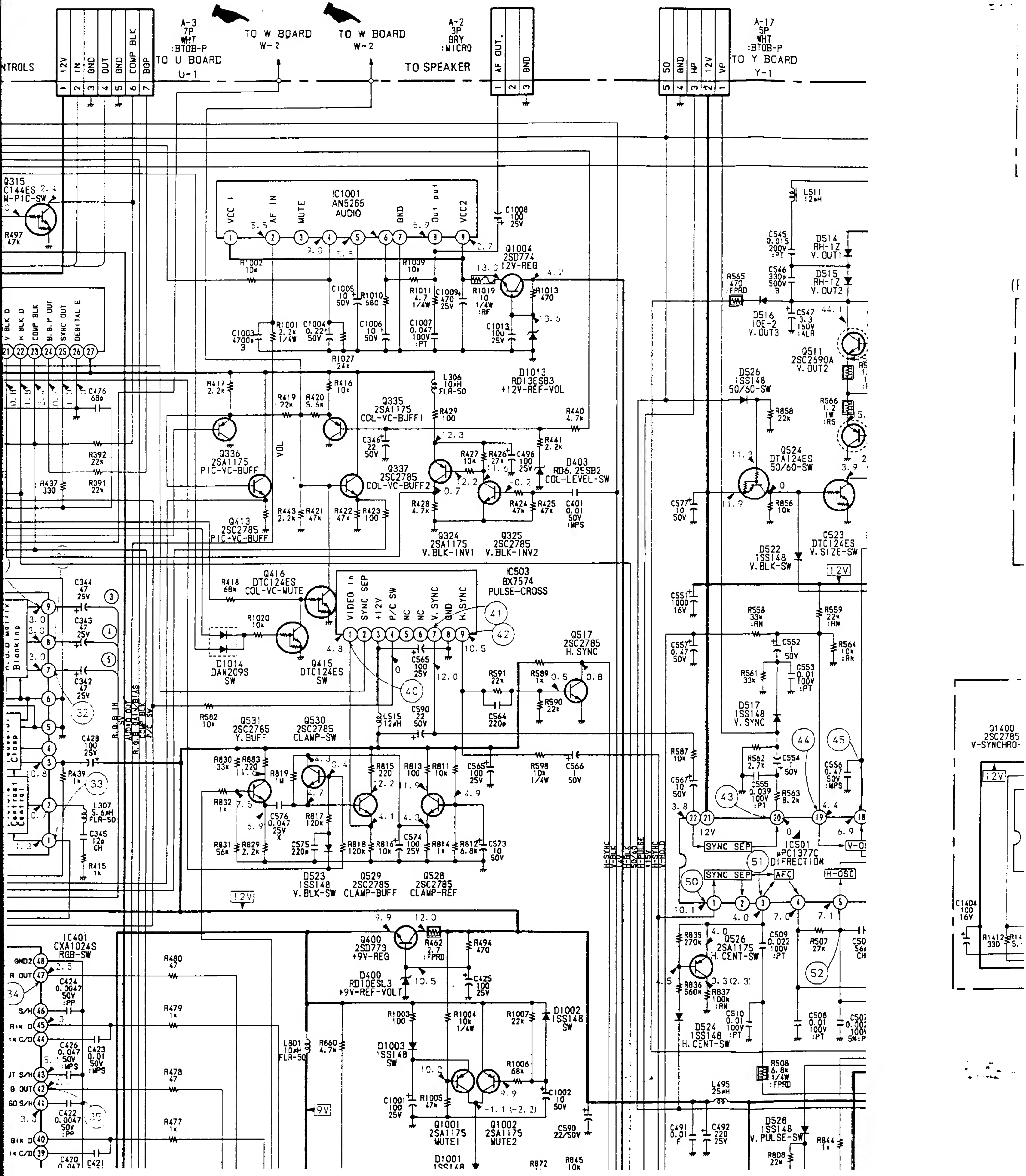
TO U BOARD U-1
A-3 7P WHT :BTOB-P
12V
IN
GND
OUT
GND
COMP BLK
BGP
TO W BOARD W-2
TO W BOARD W-2
A-2 3P GRY :MICRO
TO SPEAKER
AF OUT
GND
A-17 5P WHT :BTOB-P
TO Y BOARD Y-1
50
GND
HP
12V
VP
IC1001 AN5265 AUDIO
VCC 1
AF IN
MUTE
GND
Out put
VCC2
C1008 100 25V
Q1004 2SD774 12V-REG
D1013 RD13ESB3 +12V-REF-VOL
Q335 2SA1175 COL-VC-BUFF1
Q336 2SA1175 PIC-VC-BUFF
Q337 2SC2785 COL-VC-BUFF2
Q413 2SC2785 PIC-VC-BUFF
Q324 2SA1175 V.BLK-INV1
Q325 2SC2785 V.BLK-INV2
D403 RD6.2ESB2 COL-LEVEL-SW
Q416 DTC124ES COL-VC-MUTE
Q415 DTC124ES SW
D1014 DAN209S SW
IC503 BX7574 PULSE-CROSS
VIDEO In
SYNC SEP
+12V
P/C SW
NC
NC
V.SYNC
GND
H.SYNC
Q517 2SC2785 H. SYNC
Q531 2SC2785 Y.BUFF
Q530 2SC2785 CLAMP-SW
D523 1SS148 V.BLK-SW
Q529 2SC2785 CLAMP-BUFF
Q528 2SC2785 CLAMP-REF
Q400 2SD773 +9V-REG
D400 RD10ESL3 +9V-REF-VOLT
IC401 CXA1024S RGB-SW
Q1001 2SA1175 MUTE1
Q1002 2SA1175 MUTE2
D1001 1SS148
D1002 1SS148 SW
D1003 1SS148 SW
Q315 DTC144ES M-PIC-SW
L511 12μH
D514 RH-1Z V.OUT1
D515 RH-1Z V.OUT2
D516 10E-2 V.OUT3
Q511 2SC2690A V.OUT2
D526 1SS148 50/60-SW
Q524 DTA124ES 50/60-SW
D522 1SS148 V.BLK-SW
Q523 DTC124ES V.SIZE-SW
D517 1SS148 V.SYNC
IC501 μPC1377C DIFRECTION
SYNC SEP
AFC
H-OSC
Q526 2SA1175 H. CENT-SW
D524 1SS148 H. CENT-SW
D528 1SS148 V. PULSE-SW
Q1400 2SC2785 V-SYNCHRO-
12V
9V
H-SYNC
V-BLK
H-BLK
50/60
H-PULSE
H-SYNC
V-HOLD
R.G.B IN
AUDIO OUT
R.G.B GAIN/BIAS
COMP BLK
B.G.P
P/C SW
V BLK D
H BLK D
COMP BLK
B.G.P OUT
SYNC OUT
DEGITAL E

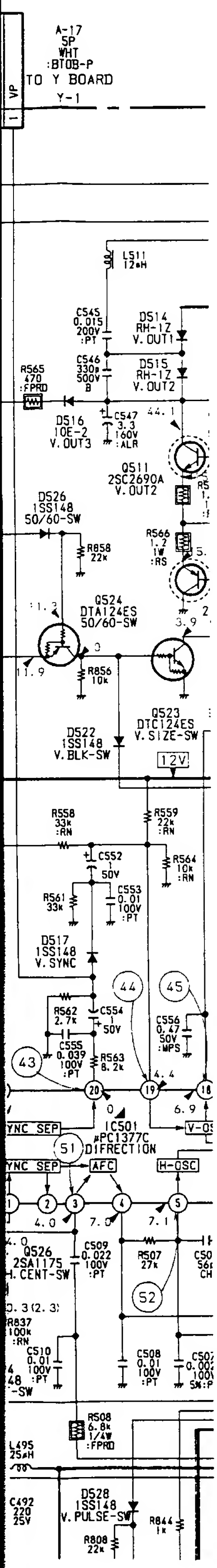
A-17
5P
WHT
:BTOB-P
TO Y BOARD
Y-1
VP
L511 12μH
C545 0.015 200V :PT
D514 RH-1Z V.OUT1
C546 330p 500V B
D515 RH-1Z V.OUT2
R565 470 :FPRD
C547 3.3 160V :ALR
D516 10E-2 V.OUT3
Q511 2SC2690A V.OUT2
D526 1SS148 50/60-SW
R858 22k
R566 1.2 1W :RS
Q524 DTA124ES 50/60-SW
R856 10k
Q523 DTC124ES V.SIZE-SW
D522 1SS148 V.BLK-SW
12V
R558 33k :RN
R559 22k :RN
C552 1 50V
R564 10k :RN
R561 33k
C553 0.01 100V :PT
D517 1SS148 V.SYNC
44
45
R562 2.7k
C554 1 50V
C556 0.47 50V :MPS
C555 0.039 100V :PT
R563 8.2k
43
IC501 μPC1377C DIFRECTION
SYNC SEP
51
AFC
H-OSC
V-OSC
Q526 2SA1175 H.CENT-SW
C509 0.022 100V :PT
R507 27k
52
R837 100k :RN
C510 0.01 100V :PT
C508 0.01 100V :PT
R508 6.8k 1/4W :FPRD
L495 25μH
C492 220 25V
D528 1SS148 V.PULSE-SW
R844 1k
R808 22k

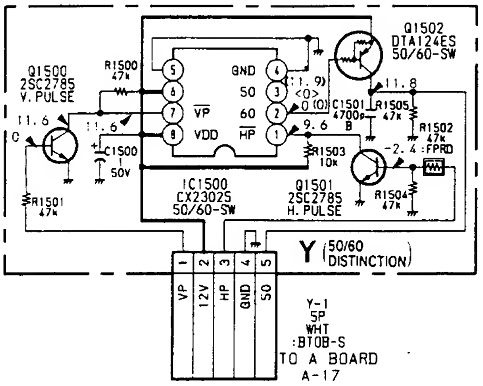
Q1502 DTA124ES 50/60-SW
Q1500 2SC2785 V.PULSE
R1500 47k
GND
50
60
VP
VDD
HP
11.8
C1501 4700p B
R1505 47k
R1502 47k :FPRD
C1500 1 50V
R1503 10k
R1501 47k
IC1500 CX23025 50/60-SW
Q1501 2SC2785 H.PULSE
R1504 47k
Y (50/60 DISTINCTION)
VP
12V
HP
GND
50
Y-1
5P
WHT
:BTOB-S
TO A BOARD
A-17

(PVM-1440QM)

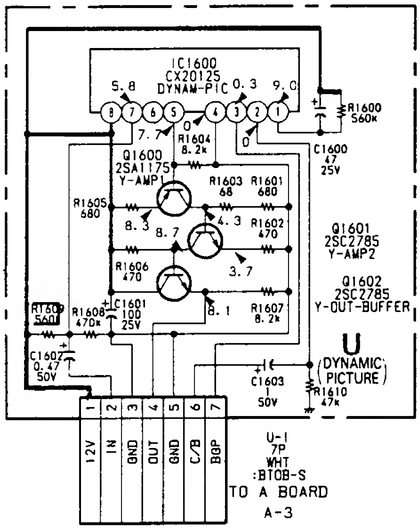
IC1600 CX20125 DYNAM-PIC
R1600 560k
C1600 47 25V
R1604 8.2k
Q1600 2SA1175 Y-AMP1
R1603 68
R1601 680
R1605 680
R1602 470
Q1601 2SC2785 Y-AMP2
R1606 470
Q1602 2SC2785 Y-OUT-BUFFER
R1609 560
R1608 470k
C1601 100 25V
R1607 8.2k
C1602 0.47 50V
C1603 1 50V
R1610 47k
U (DYNAMIC PICTURE)
12V
IN
GND
OUT
GND
C/B
BGP
U-1
7P
WHT
:BTOB-S
TO A BOARD
A-3

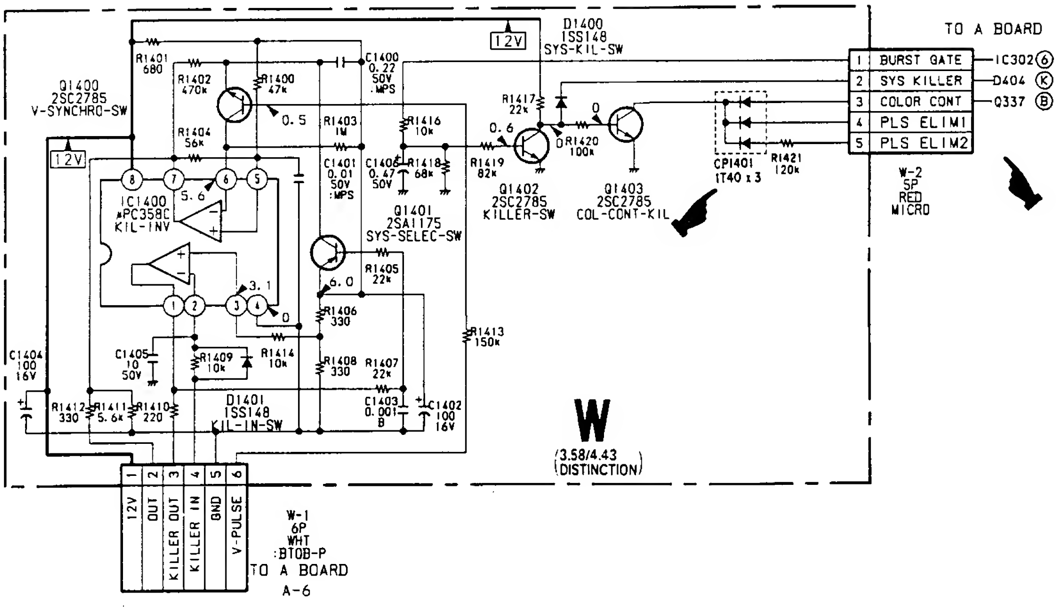
TO A BOARD
D1400 1SS148 SYS-KIL-SW
12V
R1401 680
C1400 0.22 50V :MPS
Q1400 2SC2785 V-SYNCHRO-SW
R1402 470k
R1400 47k
R1417 22k
BURST GATE
SYS KILLER
COLOR CONT
PLS ELIM1
PLS ELIM2
IC302 6 pin
D404 K
Q337 B
R1404 56k
R1403 1M
R1416 10k
R1420 100k
CP1401 1T40 x 3
R1421 120k
W-2
5P
RED
MICRO
C1401 0.01 50V :MPS
C1406 0.47 50V
R1418 68k
R1419 82k
Q1402 2SC2785 KILLER-SW
Q1403 2SC2785 COL-CONT-KIL
IC1400 μPC358C KIL-INV
Q1401 2SA1175 SYS-SELEC-SW
R1405 22k
R1406 330
R1413 150k
C1404 100 16V
C1405 10 50V
R1409 10k
R1414 10k
R1408 330
R1407 22k
R1412 330
R1411 5.6k
R1410 220
D1401 1SS148 KIL-IN-SW
C1403 0.001 B
C1402 100 16V
W (3.58/4.43 DISTINCTION)
12V
OUT
KILLER OUT
KILLER IN
GND
V-PULSE
W-1
6P
WHT
:BTOB-P
TO A BOARD
A-6

6-3. PRINTED WIRING BOARDS – *Conductor Side* – A [SIGNAL PROCESS, DEFLECTION SYSTEM]

– A Board – Page 36, 37, and 39

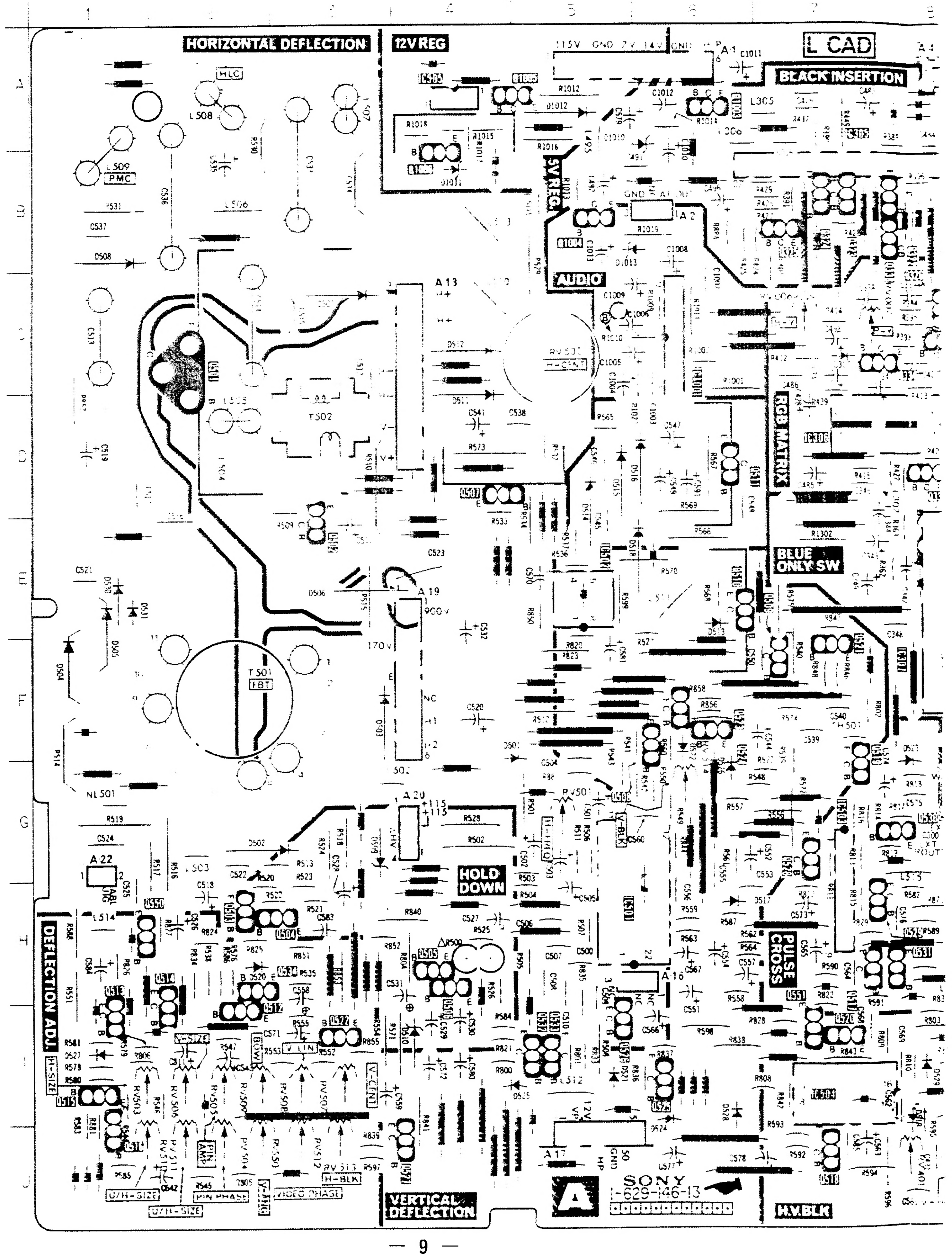
HORIZONTAL DEFLECTION
12V REG
L CAD
BLACK INSERTION
HLC
PMC
5V REG
AUDIO
RV501 H-CENT
RGB MATRIX
BLUE ONLY SW
T502
T501 FBT
A 19
900V
170V
HOLD DOWN
DEFLECTION ADJ.
H-SIZE
V-SIZE
BOW
V-LIN
V-CENT
PIN AMP
U/H-SIZE
PIN PHASE
V-ATC
VIDEO PHASE
H-BLK
H-FREQ
V-BLK
PULSE CROSS
VERTICAL DEFLECTION
H.V.BLK
SONY
1-629-146-13
A

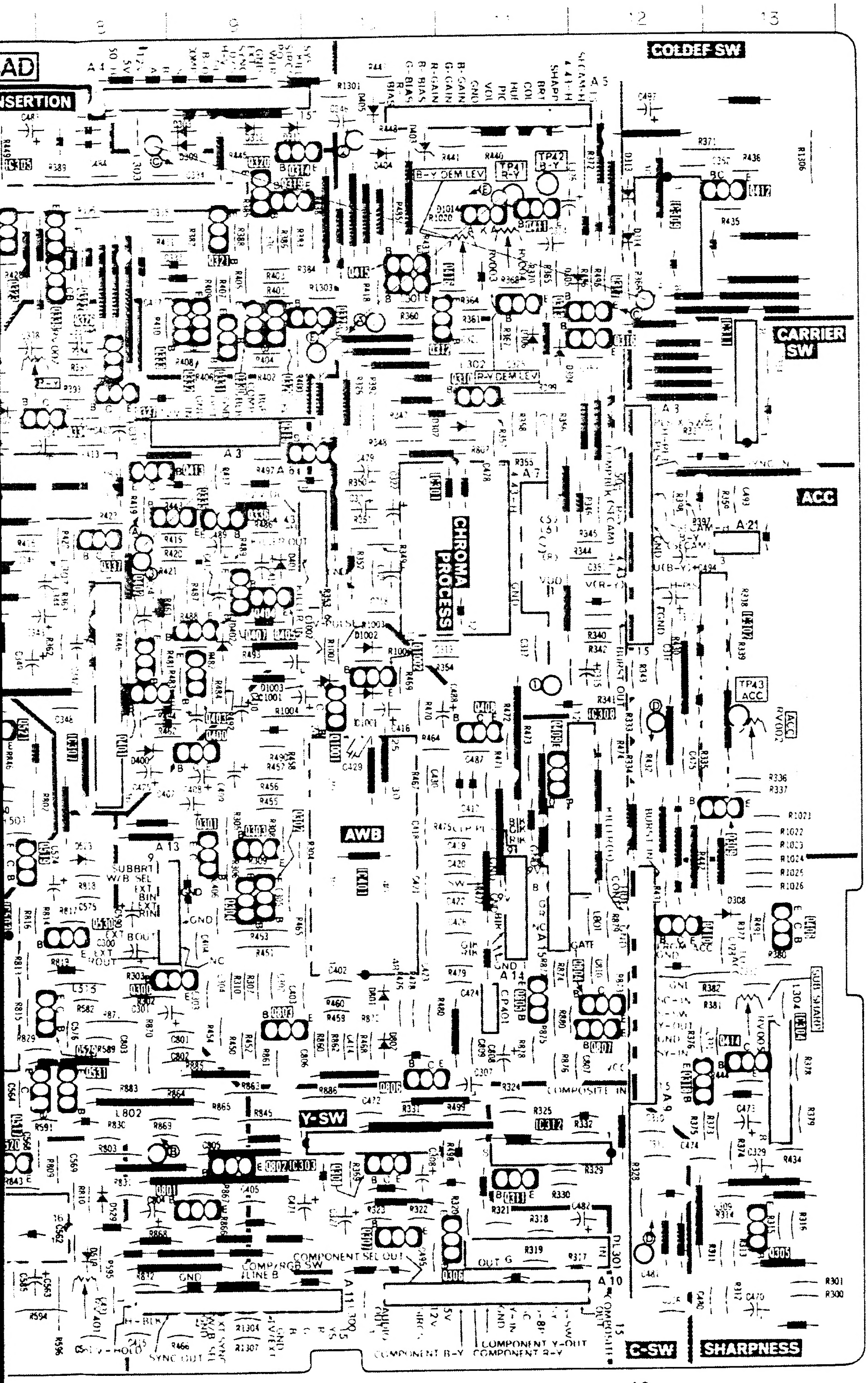
AD
INSERTION
COLDEF SW
CARRIER SW
ACC
CHROMA PROCESS
AWB
Y-SW
C-SW
SHARPNESS
B-Y DEM LEV
R-Y DEM LEV
TP41 R-Y
TP42 B-Y
TP43 ACC
COMPONENT SEL OUT
COMP/RGB SW
COMPOSITE IN
SYNC OUT
COMPONENT B-Y
COMPONENT Y-OUT
COMPONENT R-Y
8
9
10
11
12
13

W 3.58/4.43 DISTINCTION

— W Board —

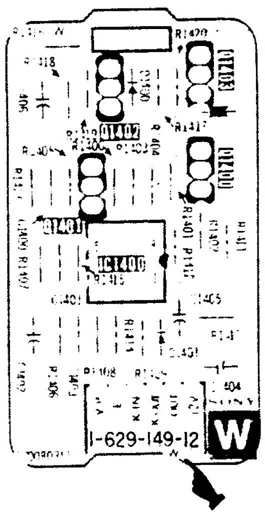
IC1400
Q1400
Q1401
Q1402
Q1403
1-629-149-12
W

7-1. CHASSIS

Page 71

REF.NO.	PART NO.	DESCRIPTION	REMARK
1	⚠*3-704-372-01	HOLDER, HV CABLE	
2	⚠.1-237-614-12	RESISTOR ASSY, HIGH-VOLTAGE	
3	*4-391-842-01	BRACKET, HVR	
4	X-4391-805-1	CABINET ASSY, BOTTOM	
5	*A-1245-456-A	FE BOARD, COMPLETE	
6	*A-1291-616-A	A BOARD, COMPLETE	
7	⚠.1-439-395-12	TRANSFORMER ASSY, FLYBACK	
8	*1-629-149-12	W BOARD	
9	*1-629-151-11	XA BOARD	
10	*1-629-150-11	Y BOARD	
11	*1-629-148-11	V BOARD	
12	*1-629-219-11	U BOARD (PVM-1440QM ONLY)	

REF.NO.	PART NO.	DESCRIPTION	REMARK
14	*A-1135-564-A	BA BOARD, COMPLETE (PVM-1440QM ONLY)	
	*A-1135-573-A	BA BOARD, COMPLETE (PVM-1442QM/ 1444QM ONLY)	
15	*A-1270-249-A	QE BOARD, COMPLETE (PVM-1442QM ONLY)	
16	*A-1270-267-A	QG BOARD, COMPLETE (PVM-1440QM ONLY)	
	*A-1270-248-A	QD BOARD, COMPLETE (PVM-1442QM ONLY)	
	*A-1270-246-A	QB BOARD, COMPLETE (PVM-1444QM ONLY)	
17	*A-1270-266-A	QF BOARD, COMPLETE (PVM-1440QM ONLY)	
	*A-1270-247-A	QC BOARD, COMPLETE (PVM-1442QM ONLY)	
	*A-1270-245-A	QA BOARD, COMPLETE (PVM-1444QM ONLY)	
18	4-391-843-32	PLATE, TERMINAL (PVM-1440QM ONLY)	
	4-391-843-12	PLATE, TERMINAL (PVM-1442QM ONLY)	
	4-391-843-02	PLATE, TERMINAL (PVM-1444QM ONLY)	
19	*3-682-419-01	HOLDER, P.C.B	

7-2. PICTURE TUBE

Page 72

REF.NO.	PART NO.	DESCRIPTION	REMARK
51	1-466-113-11	CONTROL UNIT (PVM-1440QM ONLY)	
	1-466-076-11	CONTROL UNIT (PVM-1442QM ONLY)	
	1-466-198-11	CONTROL UNIT (PVM-1444QM ONLY)	
53	1-544-063-11	SPEAKER	
54	4-374-839-11	BUTTON (A)	
55	4-391-824-01	JOINT	
56	⚠.1-554-967-12	SWITCH, PUSH (AC POWER)(1 KEY)	
57	*4-391-820-01	COVER, AC SWITCH	
58	X-4391-804-1	BEZEL ASSY (PVM-1442QM/44QM ONLY)	
	X-4391-804-2	BEZEL ASSY (PVM-1440QM ONLY)	
59	⚠.8-736-254-05	PICTURE TUBE (A34JHS10X) (PVM-1440QM ONLY)	
	⚠.8-734-621-05	PICTURE TUBE (M34KBE31X) (PVM-1442QM/1444QM ONLY)	
60	3-703-961-01	SPACER, DY	
61	⚠.1-451-329-11	DEFLECTION YOKE (Y14FZA)	
62	*4-382-050-01	BAND, C PC BOARD	
64	*A-1330-986-A	C BOARD, COMPLETE	

REF.NO.	PART NO.	DESCRIPTION	REMARK
66	*4-391-835-01	PLATE (C), SHIELD (PVM-1442QM ONLY)	
67	*4-374-912-01	COVER (MAIN), CV VOL	
68	*4-374-913-01	COVER (REAR LID), CV.VOL	
69	⚠.1-426-145-13	COIL, DEGAUSSING	
70	4-307-249-00	SCREW (5), TAPPING	
71	4-391-833-01	CLOTH, PROTECTION	
72	4-391-839-01	COVER, REAR	
73	X-4391-810-1	COVER ASSY, TOP	
74	4-391-825-01	RIVET, NYLON	
75	⚠.*4-364-745-01	BUSHING, AC CORD	
76	⚠.1-574-389-12	CORD, POWER	
77	4-308-870-00	CLIP, LEAD WIRE	
78	1-452-032-00	MAGNET, DISK; 10MM ϕ	
79	1-452-094-00	MAGNET, ROTATABLE DISK; 15MM ϕ	
80	X-4309-608-0	PERMALLOY ASSY, CONVERGENCE	
82	*1-629-153-11	J BOARD	
83	1-543-604-11	CORE, RING	
84	4-847-802-11	SCREW (OS), CASE, CLAW	
85	1-452-277-00	MAGNET BMC	

SECTION 8
ELECTRICAL PARTS LIST

-A BOARD- Page 83

Ref.No.	Part No.	Description	Remark
	*A-1291-616-A	A BOARD, COMPLETE ******************	
	*4-329-153-00	HEAT SINK, V OUT	
	*4-341-751-01	EYELET	
	*4-341-752-01	EYELET	
	*4-363-404-00	HOLDER, IC	
	4-363-414-00	SPACER, MICA	

Page 88

Ref.No.	Part No.	Description				Remark
R361	1-249-405-11	CARBON	100	5%	1/4W	
R362	1-249-410-11	CARBON	270	5%	1/4W	
R363	1-249-432-11	CARBON	18K	5%	1/4W	
R364	1-249-417-11	CARBON	1K	5%	1/4W	
R365	1-249-432-11	CARBON	18K	5%	1/4W	
R366	1-249-437-11	CARBON	47K	5%	1/4W	
R367	1-249-413-11	CARBON	470	5%	1/4W	
R368	1-249-405-11	CARBON	100	5%	1/4W	
R369	1-249-405-11	CARBON	100	5%	1/4W	
R370	1-249-417-11	CARBON	1K	5%	1/4W	
R371	1-249-432-11	CARBON	18K	5%	1/4W	
R372	1-249-465-11	CARBON	47K	5%	1/4W	
R373	1-249-436-11	CARBON	39K	5%	1/4W	
R374	1-249-432-11	CARBON	18K	5%	1/4W	
R375	1-249-405-11	CARBON	100	5%	1/4W	
R376	1-249-417-11	CARBON	1K	5%	1/4W	
R377	1-249-437-11	CARBON	47K	5%	1/4W	
R378	1-249-433-11	CARBON	22K	5%	1/4W	
R379	1-249-430-11	CARBON	12K	5%	1/4W	
R380	1-249-405-11	CARBON	100	5%	1/4W	

Page 93

Ref.No.	Part No.	Description				Remark
R1416	1-249-429-11	CARBON	10K	5%	1/4W	
R1417	1-249-433-11	CARBON	22K	5%	1/4W	
R1418	1-249-439-11	CARBON	68K	5%	1/4W	
R1419	1-249-440-11	CARBON	82K	5%	1/4W	
R1420	1-249-441-11	CARBON	100K	5%	1/4W	
R1421	1-247-881-00	CARBON	120K	5%	1/4W	

CONNECTOR

Ref.No.	Part No.	Description	Remark
W1	*1-565-482-11	CONNECTOR, BOARD TO BOARD 6P	
W2	*1-564-508-31	PLUG, CONNECTOR 5P	

-W BOARD- Page 93

Ref.No.	Part No.	Description
	*1-629-149-12	W BOARD *******

CAPACITOR

Ref.No.	Part No.	Description			
C1400	1-136-169-00	FILM	0.22MF	5%	50V
C1401	1-136-153-00	FILM	0.01MF	5%	50V
C1402	1-126-101-11	ELECT	100MF	20%	16V
C1403	1-102-074-00	CERAMIC	0.001MF	10%	50V
C1404	1-126-101-11	ELECT	100MF	20%	16V
C1405	1-123-875-11	ELECT	10MF	20%	50V
C1406	1-124-902-00	ELECT	0.47MF	20%	50V

-XA BOARD- Page 93

Ref.No.	Part No.	Description
	*1-629-151-11	XA BOARD ********

CAPACITOR

Ref.No.	Part No.	Description			
C1300	1-101-005-00	CERAMIC	0.022MF		50V
C1301	1-101-888-00	CERAMIC	68PF	5%	50V
C1302	1-101-884-00	CERAMIC	56PF	5%	50V
C1303	1-102-942-00	CERAMIC	5PF	1PF	50V
C1304	1-102-947-00	CERAMIC	10PF	0.5PF	50V
C1305	1-102-947-00	CERAMIC	10PF	0.5PF	50V
C1306	1-102-951-00	CERAMIC	15PF	5%	50V
C1307	1-102-951-00	CERAMIC	15PF	5%	50V
C1308	1-126-101-11	ELECT	100MF	20%	16V
C1309	1-102-125-00	CERAMIC	0.0047MF	10%	50V

Sony Corporation
Display Products Group

English
91JG0220-4
Printed in Japan

© 1989.9